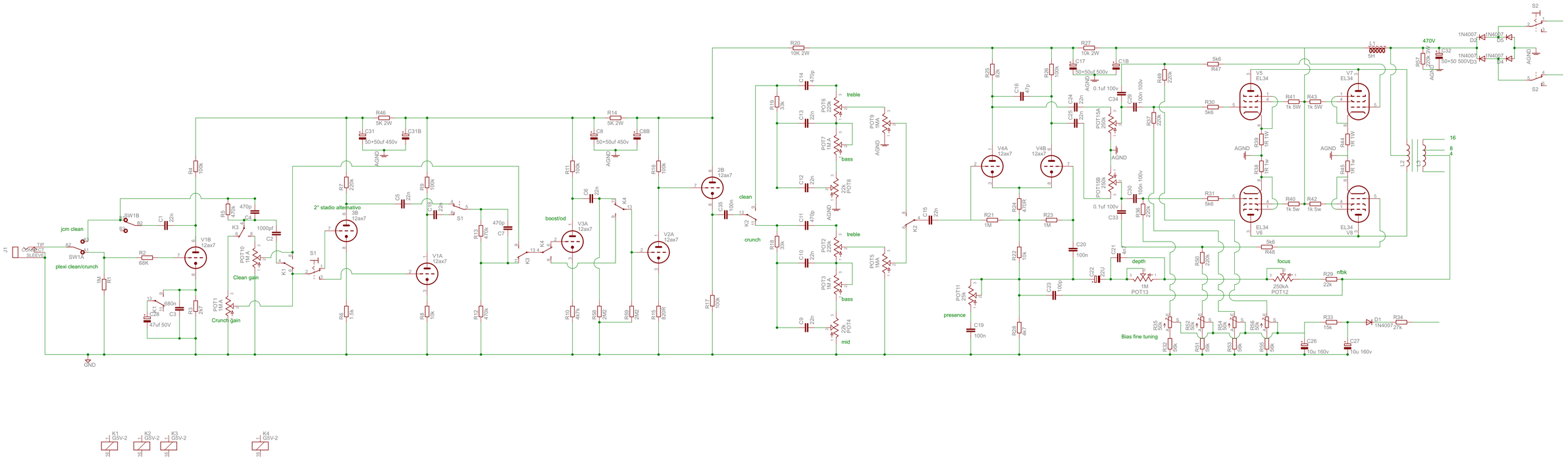

19/09/2014 15.45.12 C:\EAGLE-7.1.0\projects\TE800\te800mk2,1_100W.sch (Sheet: 1/1)