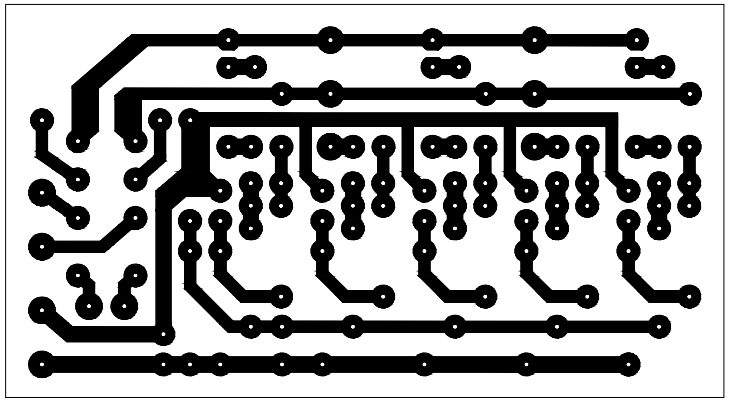

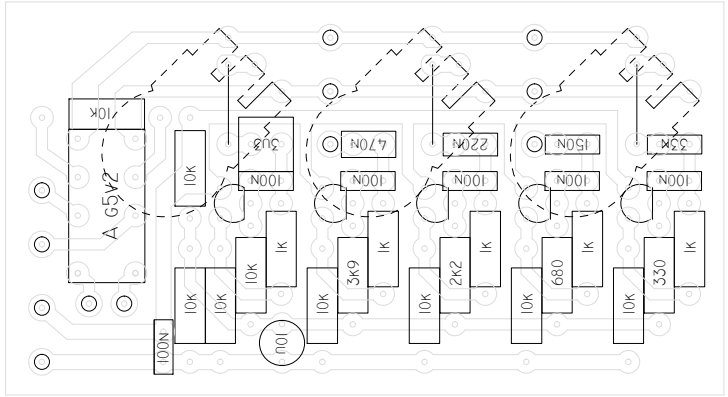
10K
A G5V2
10K
3U3
100N
470N
100N
220N
100N
150N
100N
33K
100N
1K
10K
10K
10K
10K
3K9
1K
10K
2K2
1K
10K
680
1K
10K
330
1K
100N
10U