NOTE: 3/32" GAPS HAVE BEEN DEDUCTED FROM BACK PANEL AND BAFFLE DIMS TO ALLOW FOR TWEED AND GRILL CLOTH.

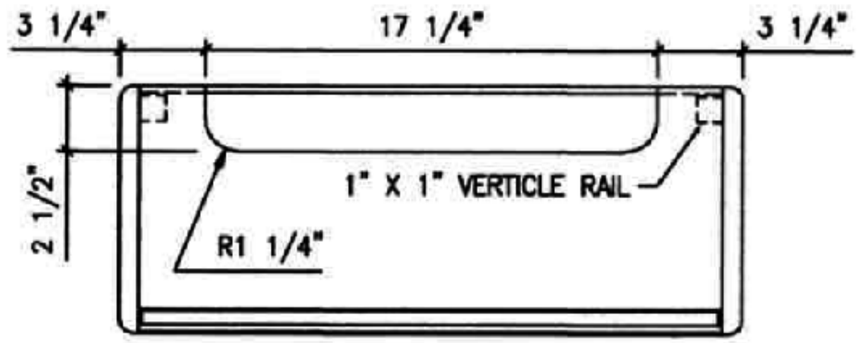

TOP VIEW

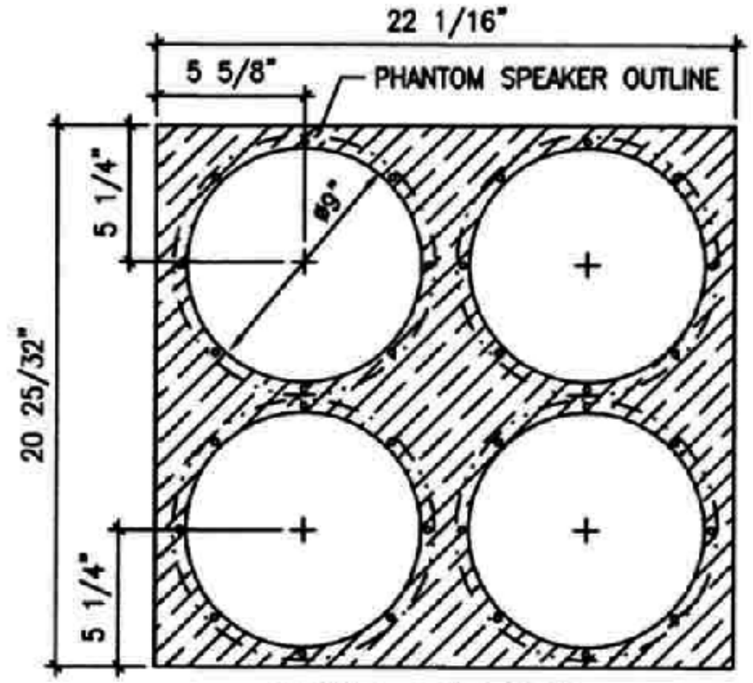

SPEAKER BAFFLE DETAIL

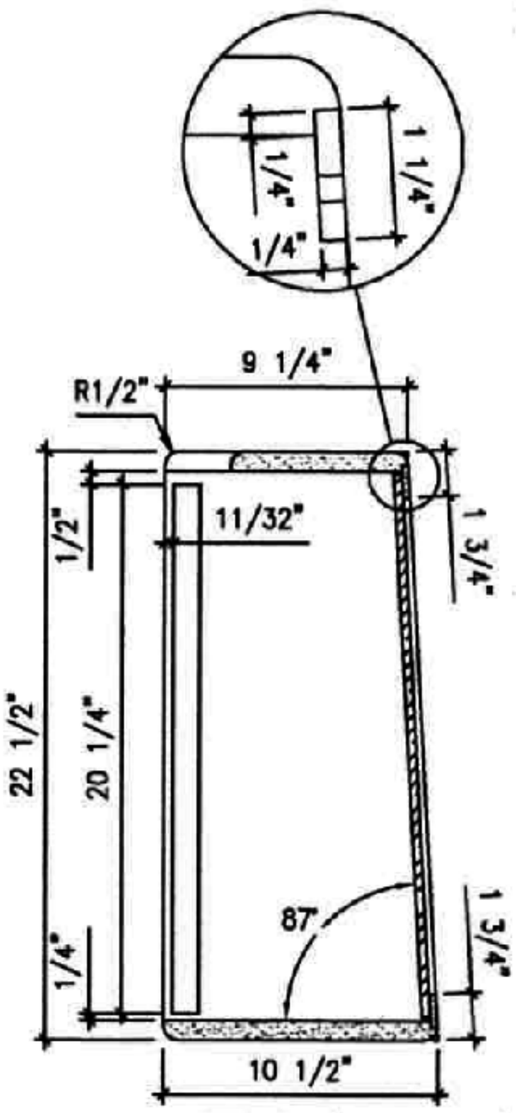

SIDE VIEW (SECTION A–A)

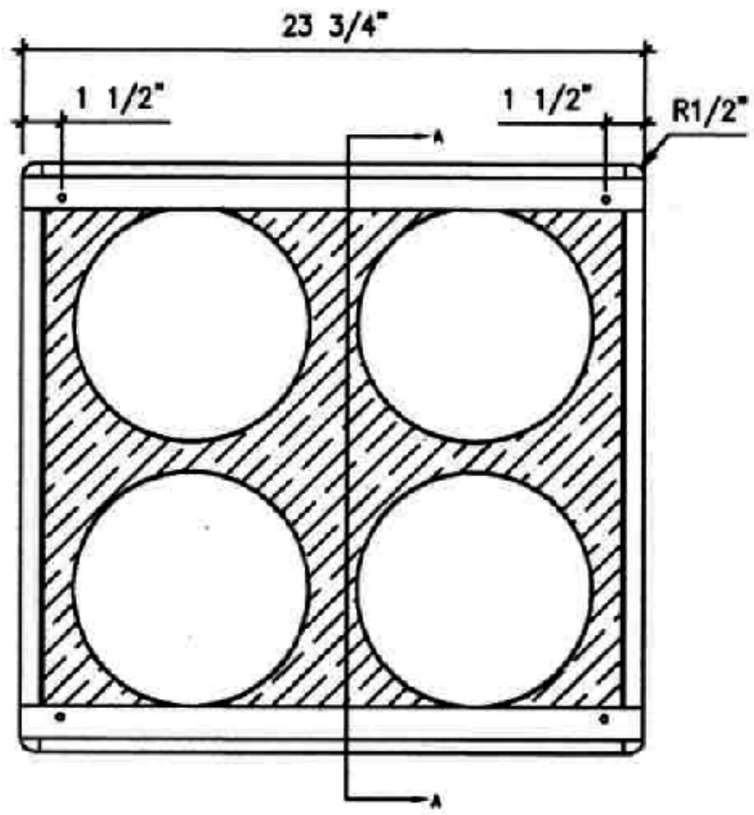

FRONT VIEW

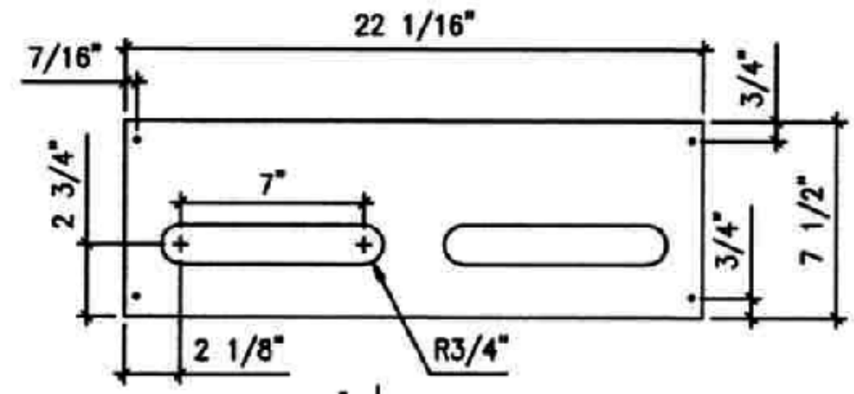

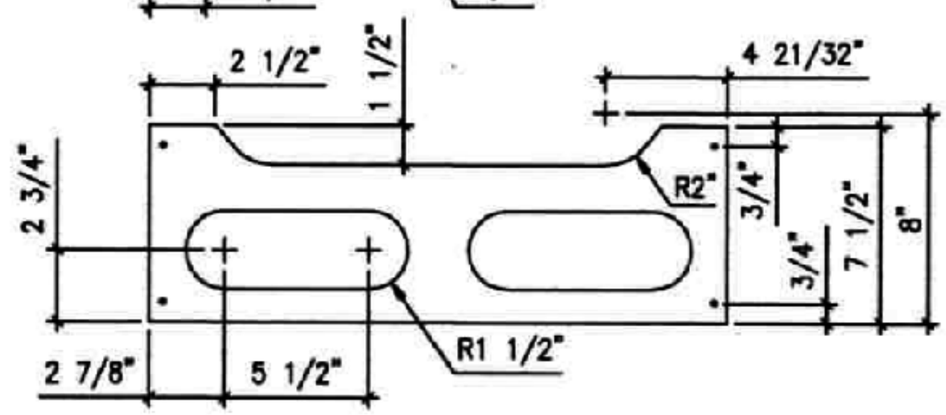

MATERIAL

3/4" SOLID PINE
1/4" SOLID PINE – FRONT "NARROW" PANELS
1/4" PLYWOOD – REAR PANELS
5/16" PLYWOOD (OR EQUIVALENT) – SPEAKER BAFFLE

Duellone Amps

CALGARY ALBERTA WWW.DUELTONEAMPS.COM

"BASSMAN" CABINET (5F6–A)

DRAWING NO.		
1 OF 1		
DRAWN BY JOE ROGERS	DATE DRAWN APRIL 22, 2004	REV