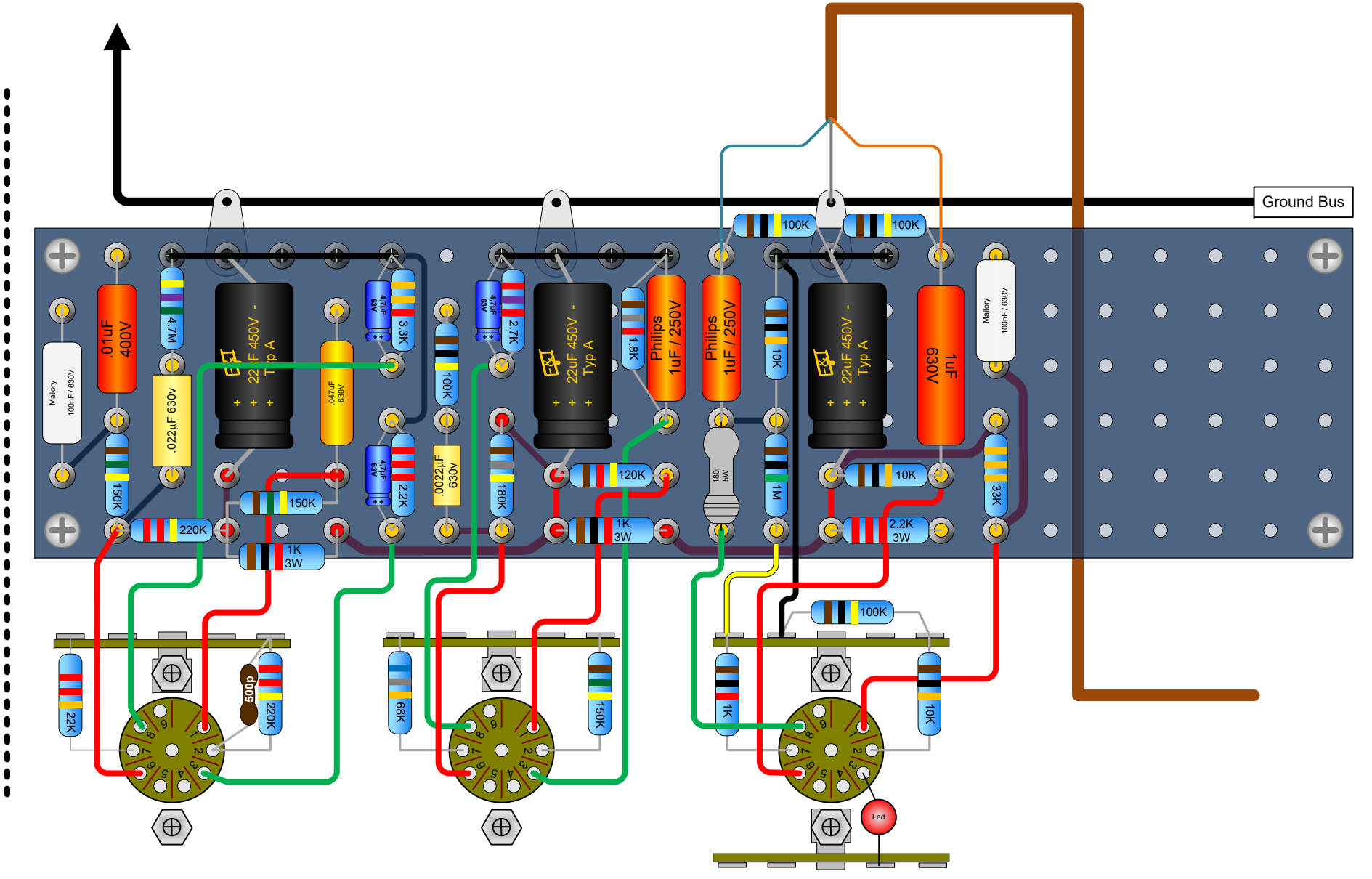
Ground Bus
100K
100K
Mallory
100nF / 630V
.01uF
400V
4.7M
.022µF 630v
22uF 450V -
Typ A
.047uF
630V
4.7uF
63V
3.3K
4.7uF
63V
2.2K
100K
.0022µF
630V
4.7uF
63V
2.7K
22uF 450V -
Typ A
1.8K
Philips
1uF / 250V
Philips
1uF / 250V
10K
22uF 450V -
Typ A
1uF
630V
Mallory
100nF / 630V
150K
220K
150K
1K
3W
180K
120K
1K
3W
100K
3W
1M
10K
2.2K
3W
33K
100K
22K
500p
220K
68K
150K
1K
10K
Led