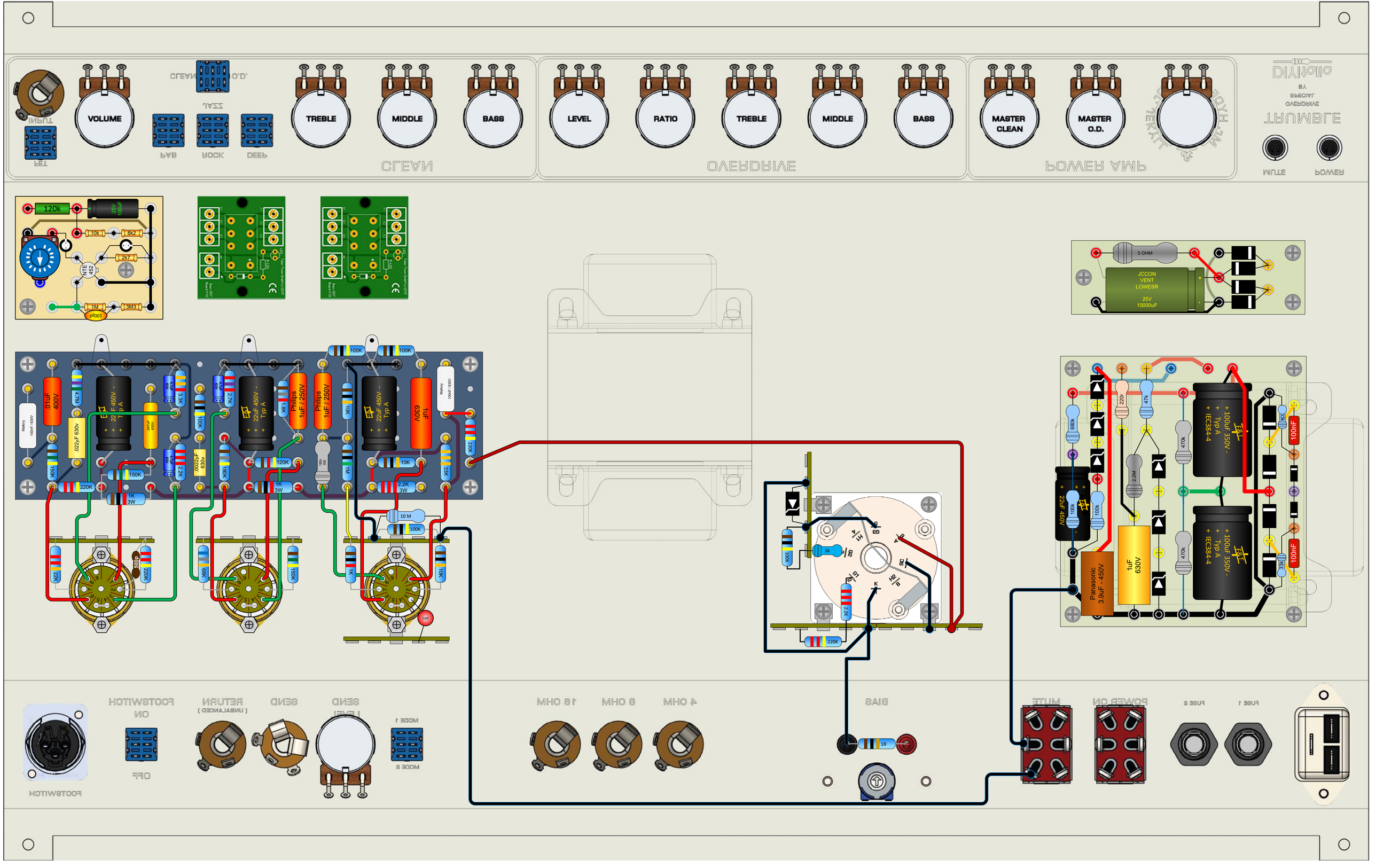
VOLUME
TREBLE
MIDDLE
BASS
LEVEL
RATIO
TREBLE
MIDDLE
BASS
MASTER CLEAN
MASTER O.D.
CLEAN
OVERDRIVE
POWER AMP
MUTE
POWER
120k
10k
8k2
2k7
NTE 452
1M
3M3
100pF
5 OHM
JCCON VENT LOWESR 25V 10000uF
Philips 1uF / 250V
22uF 450V - Typ A
1uF 630V
Panasonic 3.9uF - 450V
100uF 350V - Typ A
IEC384-4
100nF
680k
470k
2.2M
100k
4 OHM
8 OHM
16 OHM
BIAS
FUSE 1
FUSE 2
POWER ON
MUTE
MODE 1
MODE 2
SEND
RETURN
FOOTSWITCH