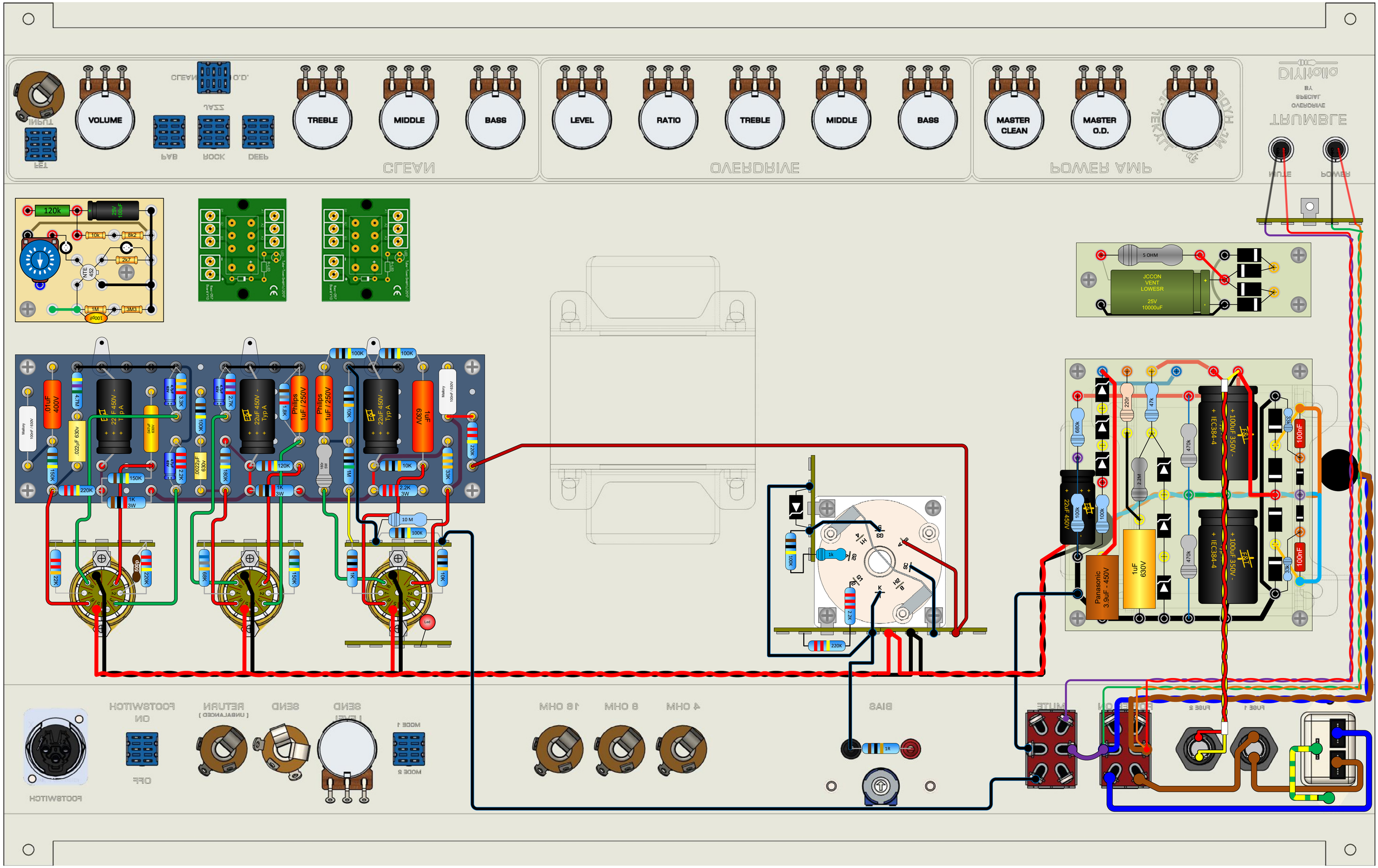
VOLUME
TREBLE
MIDDLE
BASS
LEVEL
RATIO
TREBLE
MIDDLE
BASS
MASTER CLEAN
MASTER O.D.
CLEAN
OVERDRIVE
POWER AMP
120k
10k
8k2
2k7
NTE 452
1M
3M3
100pF
25V 100uF
5 OHM
JCCON VENT LOWESR 25V 10000uF
Philips 1uF / 250V
22uF 450V - Typ A
1uF 630V
Panasonic 3.9uF - 450V
100uF 350V - IEC384-4
100nF
680k
470k
220r
47k
2.2M
33K
100K
150K
220K
10K
1K 3W
2.2K 3W
10 M
68K
180K
120K
22K
1M
Led
1R
2K2
1k
FOOTSWITCH
ON
OFF
RETURN
(UNBALANCED)
SEND
SEND
(LEVEL)
MODE 1
MODE 2
16 OHM
8 OHM
4 OHM
BIAS
MUTE
FUSE 2
FUSE 1