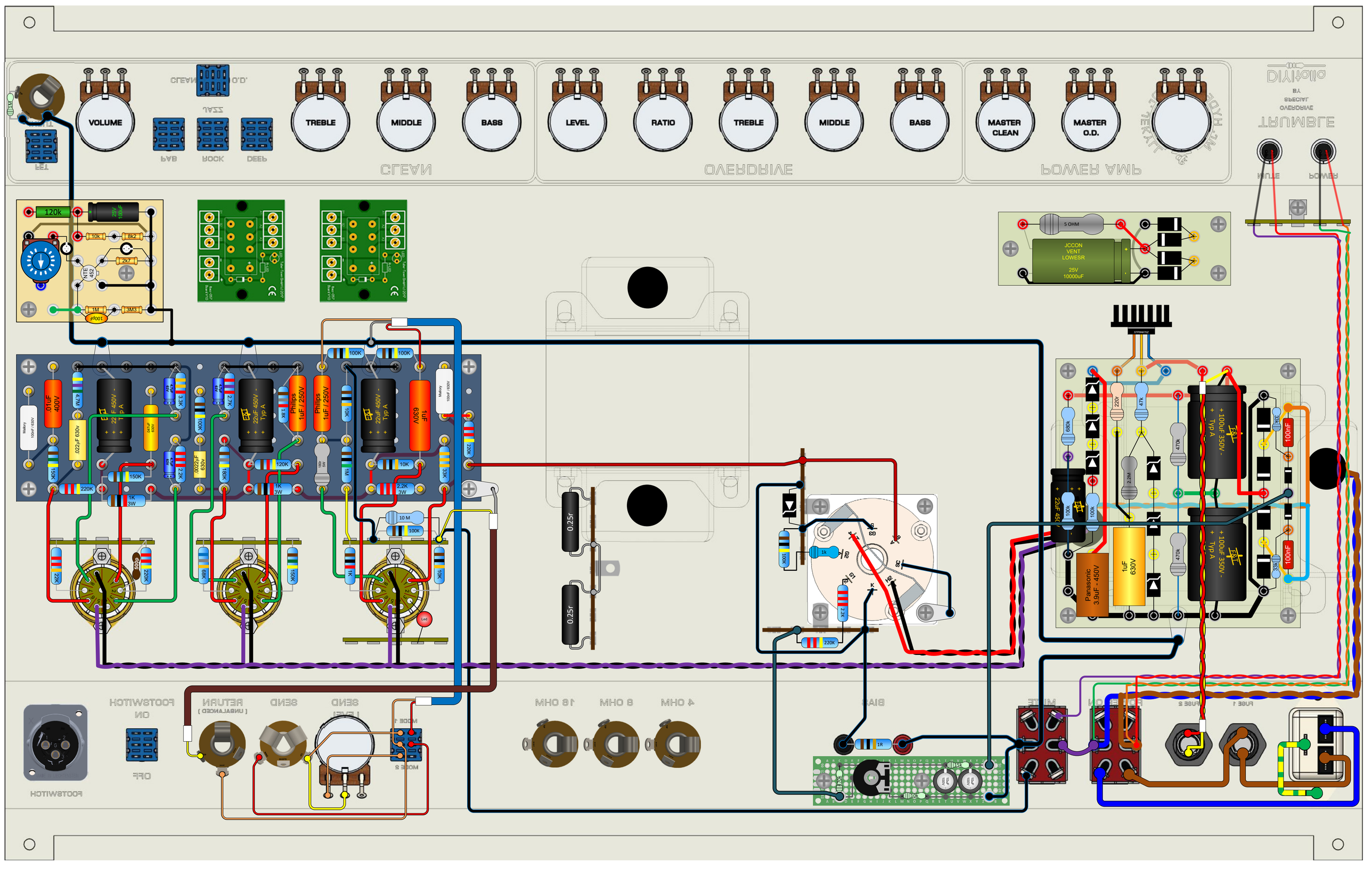
VOLUME
TREBLE
MIDDLE
BASS
LEVEL
RATIO
TREBLE
MIDDLE
BASS
MASTER CLEAN
MASTER O.D.
CLEAN
OVERDRIVE
POWER AMP
120k
10k
8k2
2k7
1M
3M3
100pF
NTE 452
5 OHM
JCCON VENT LOWESR 25V 10000uF
.01uF 400V
22 F 450V - Typ A
Philips 1uF / 250V
1uF 630V
100K
220K
150K
10K
33K
0.25r
0.25r
680k
220n
47K
470K
100nF
Panasonic 3.9uF - 450V
1uF 630V
+ 100uF 350V - Typ A
1R
220K
4 OHM
8 OHM
16 OHM
BIAS
MUTE
POWER
FUSE 1
FUSE 2
FOOTSWITCH
ON
OFF
RETURN
SEND
MODE 1
MODE 2