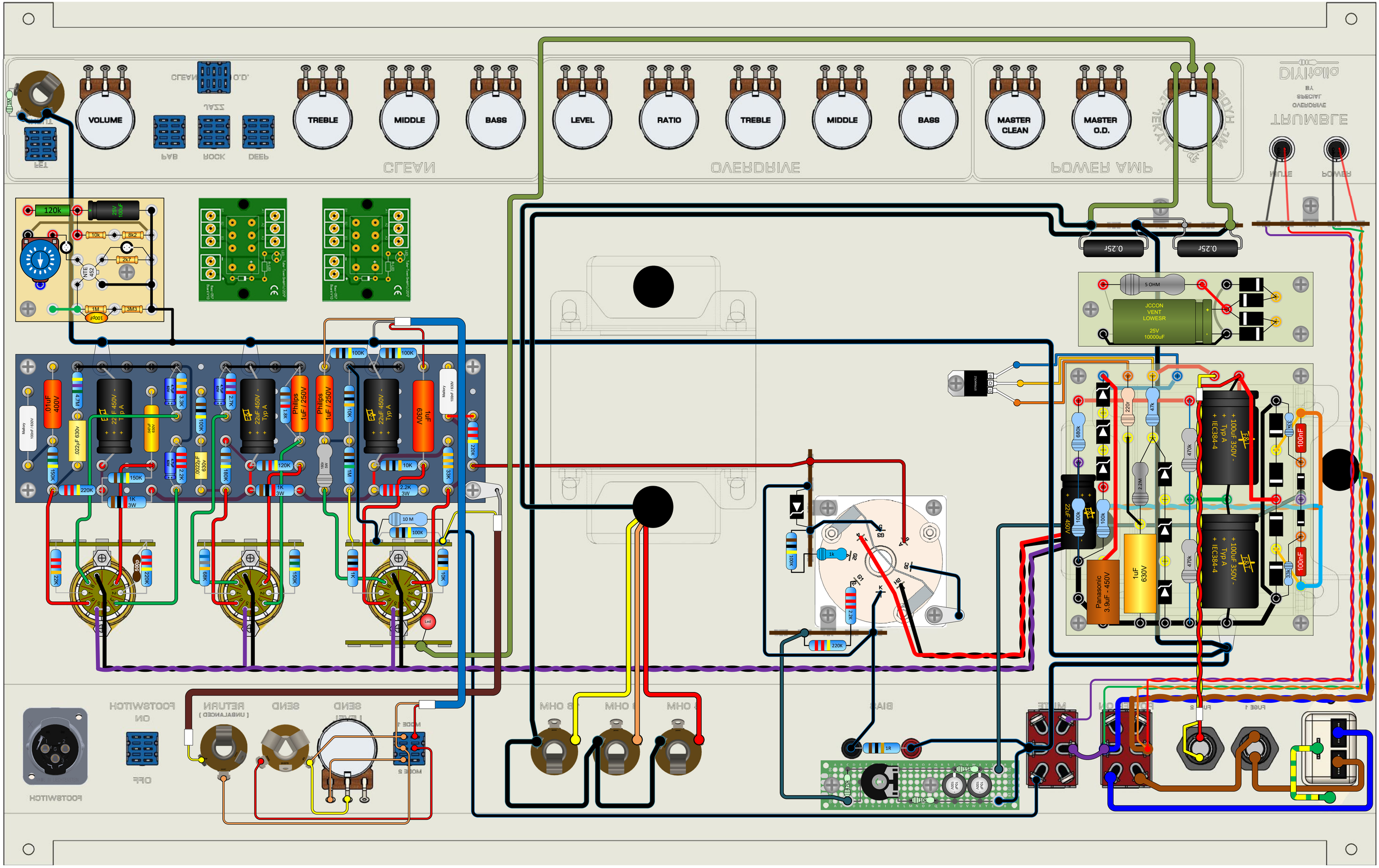
VOLUME
TREBLE
MIDDLE
BASS
LEVEL
RATIO
TREBLE
MIDDLE
BASS
MASTER CLEAN
MASTER O.D.
CLEAN
OVERDRIVE
POWER AMP
120k
10k
8k2
2k7
1M
3M3
100pF
NTE 452
JCCON VENT LOWESR 25V 10000uF
5 OHM
0.25r
0.25r
Philips 1uF / 250V
22uF 450V - Typ A
100uF 350V - Typ A IEC384-4
Panasonic 3.9uF - 450V
1uF 630V
680k
470k
220k
47k
100nF
3k3
100K
150K
220K
180K
120K
10K
33K
22K
68K
1K
1M
10 M
Led
1R
FET
DEEP
ROCK
BAR
FOOTSWITCH
ON
OFF
RETURN
SEND
MODE 1
MODE 2
FUSE 1
FUSE 2
POWER
MUTE