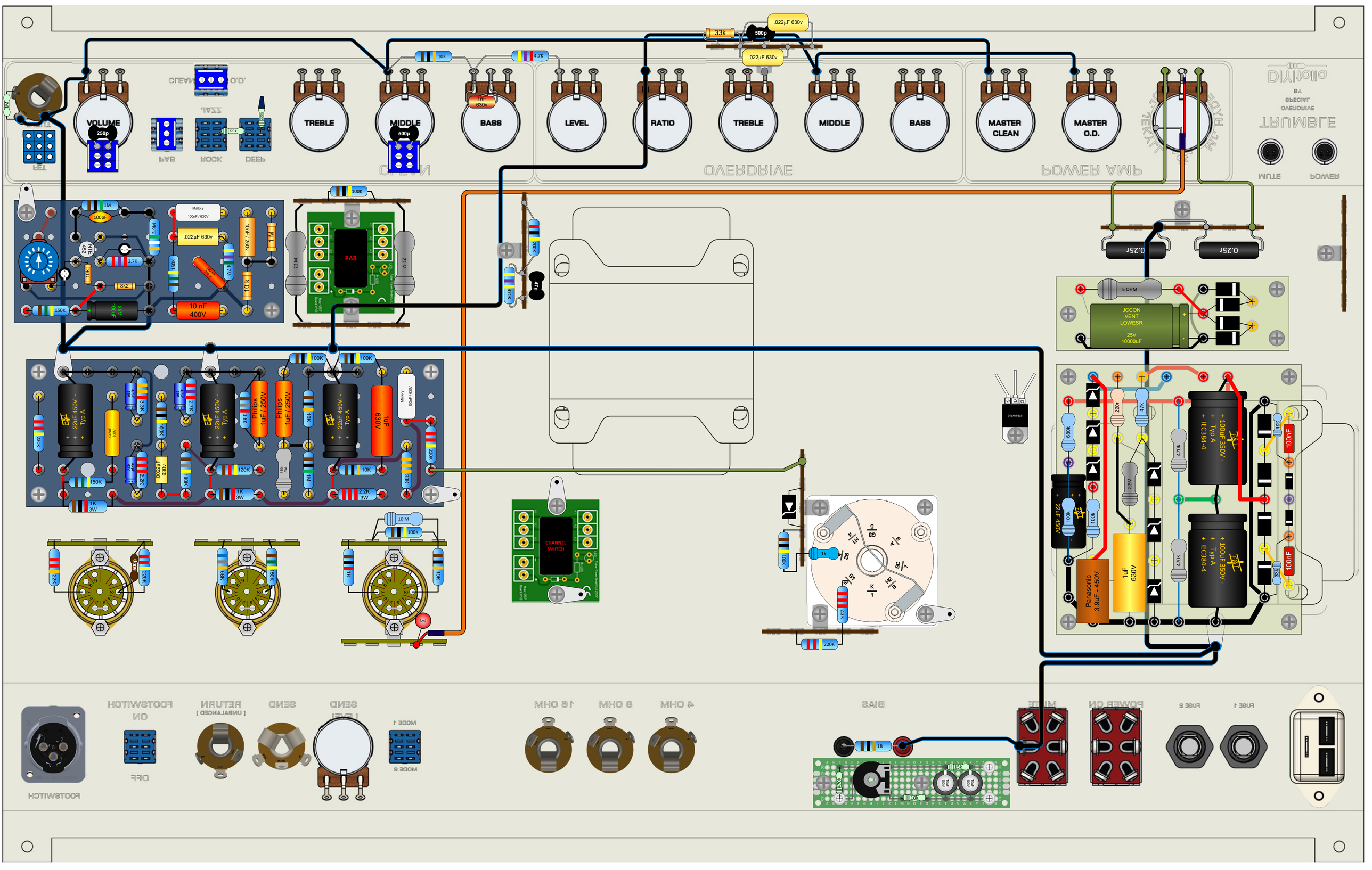
VOLUME
250p
TREBLE
MIDDLE
500p
10K
BASS
1nF 630V
4.7K
LEVEL
RATIO
TREBLE
MIDDLE
BASS
MASTER CLEAN
MASTER O.D.
33k
500p
.022µF 630v
.022µF 630v
CLEAN
OVERDRIVE
POWER AMP
TRUMBLE
DIMITRIO
MUTE
POWER
TAB
ROCK
DEEP
PAB
CHANNEL SWITCH
JCCON VENT LOWESR 25V 10000uF
5 OHM
0.25r
0.25r
Panasonic 3.9uF - 450V
1uF 630V
+ 100uF 350V - Typ A + IEC384-4
220uF 450V
Philips 1uF / 250V
22uF 450V - Typ A
1uF 630V
Mallory 100nF / 630V
.022µF 630v
10 nF 400V
FOOTSWITCH
ON
OFF
RETURN
SEND
LEVEL
MODE 1
MODE 2
4 OHM
8 OHM
16 OHM
BIAS
FUSE 1
FUSE 2
POWER ON
MUTE