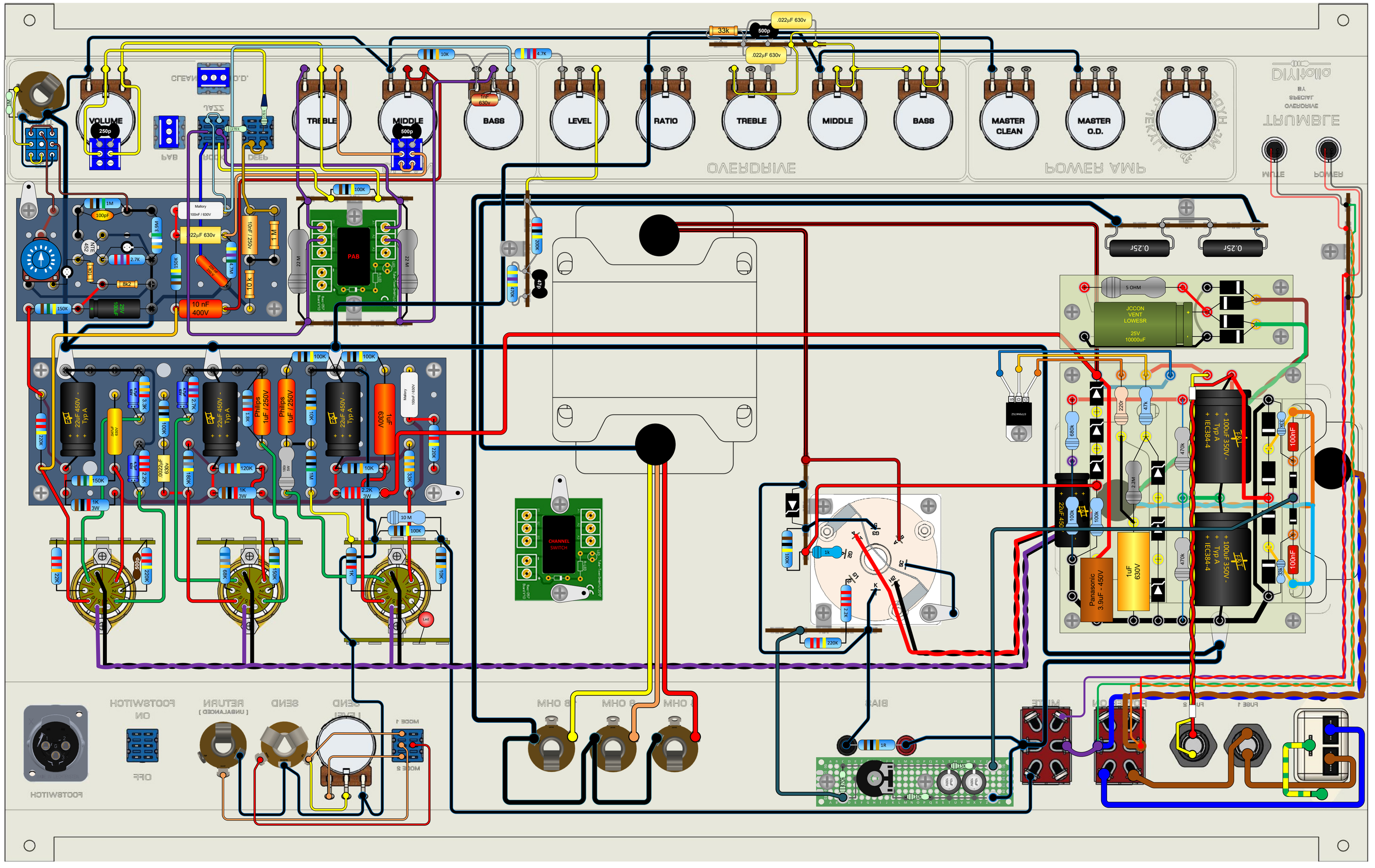
VOLUME
TREBLE
MIDDLE
BASS
LEVEL
RATIO
TREBLE
MIDDLE
BASS
MASTER CLEAN
MASTER O.D.
OVERDRIVE
POWER AMP
TRUMBLE
MUTE
POWER
PAB
CHANNEL SWITCH
JCCON VENT LOWESR 25V 10000uF
5 OHM
0.25R
0.25R
Panasonic 3.9uF - 450V
1uF 630V
100uF 350V - Typ A IEC384-4
22uF 450V - Typ A
Philips 1uF / 250V
1uF 630V
10 nF 400V
22µF 630v
Mallory 100nF / 630V
FOOTSWITCH
RETURN
SEND
MODE 1
MODE 2
BIAS
FUSE 1
FUSE 2