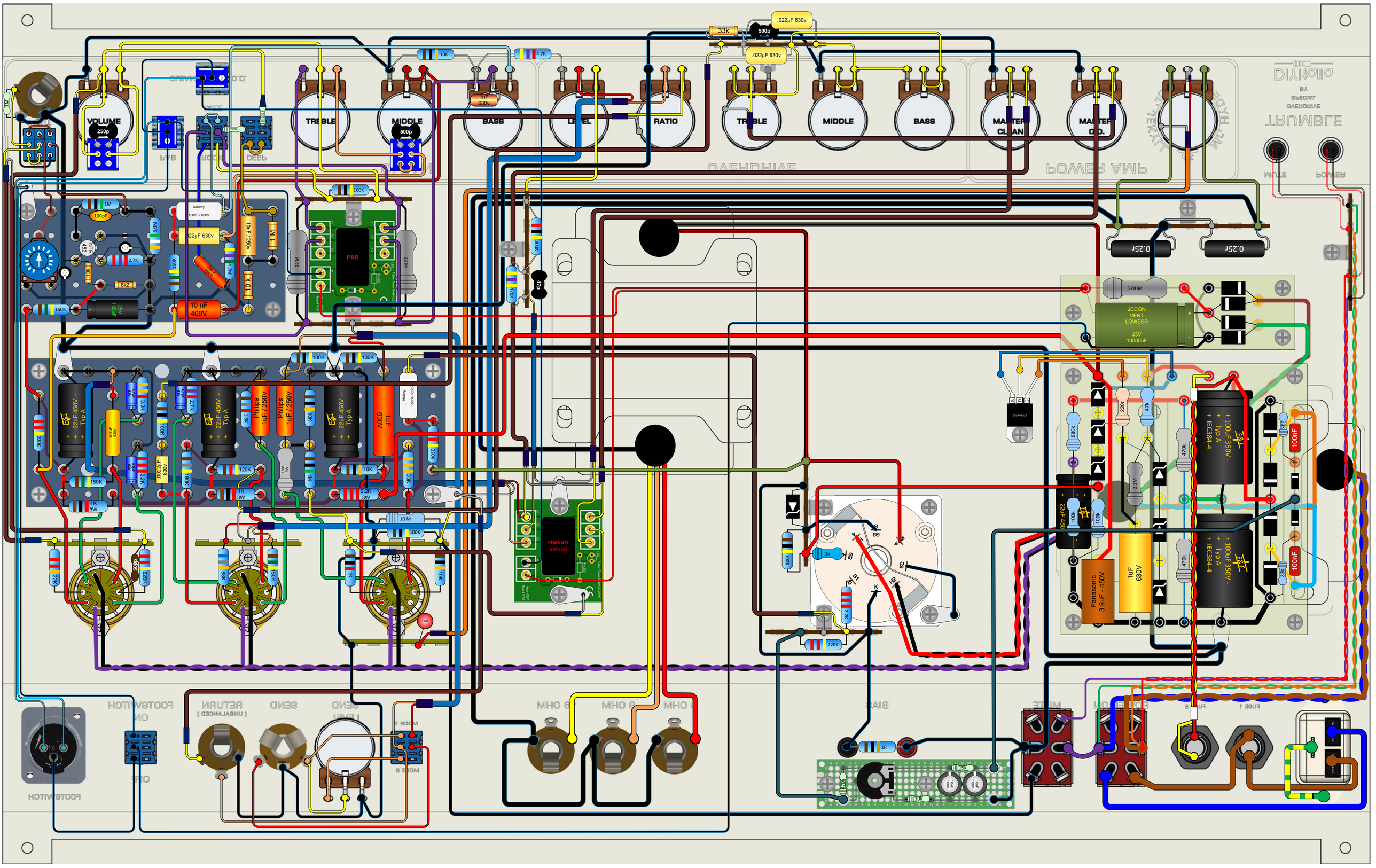
VOLUME
250p
TREBLE
MIDDLE
500p
BASS
LEVEL
RATIO
TREBLE
MIDDLE
BASS
MASTER CLEAN
MASTER OD.
10K
4.7K
33k
500p
.022µF 630v
.022µF 630v
1nF 630v
100K
1M
100pF
Mallory
100nF / 630V
.22µF 630v
10nF / 250V
1 M
NTE 452
2.7K
3.9K
10K
8k2
150K
4.7M
10 k
22 M
PAB
200K
470K
470
10 nF 400V
250V 10uF
100K
100K
22uF-450V - Typ A
Philips 1uF / 250V
1uF 630V
Mallory
220K
150K
1K 3W
120K
10K
33K
2.2K 3W
10 M
100K
22K
220K
85K
150K
1K
10K
Led
CHANNEL SWITCH
0.25r
0.25r
5 OHM
JCCON VENT LOWESR 25V 10000uF
STP9NK50Z
680k
220r
47k
470k
2.2M
100k
100k
22uF 450
Panasonic 3.9uF - 450V
1uF 630V
100uF 350V - Typ A IEC384-4
33K
100nF
100nF
2.2K
220K
1k
100k
1R
10K
1uF 100V
1uF 100V
15K
10K
FOOTSWITCH
ON
OFF
RETURN
(UNBALANCED)
SEND
LEVEL
MODE 1
MODE 2
8 OHM
8 OHM
8 OHM
BIAS
MUTE
FUSE 1
FUSE 2