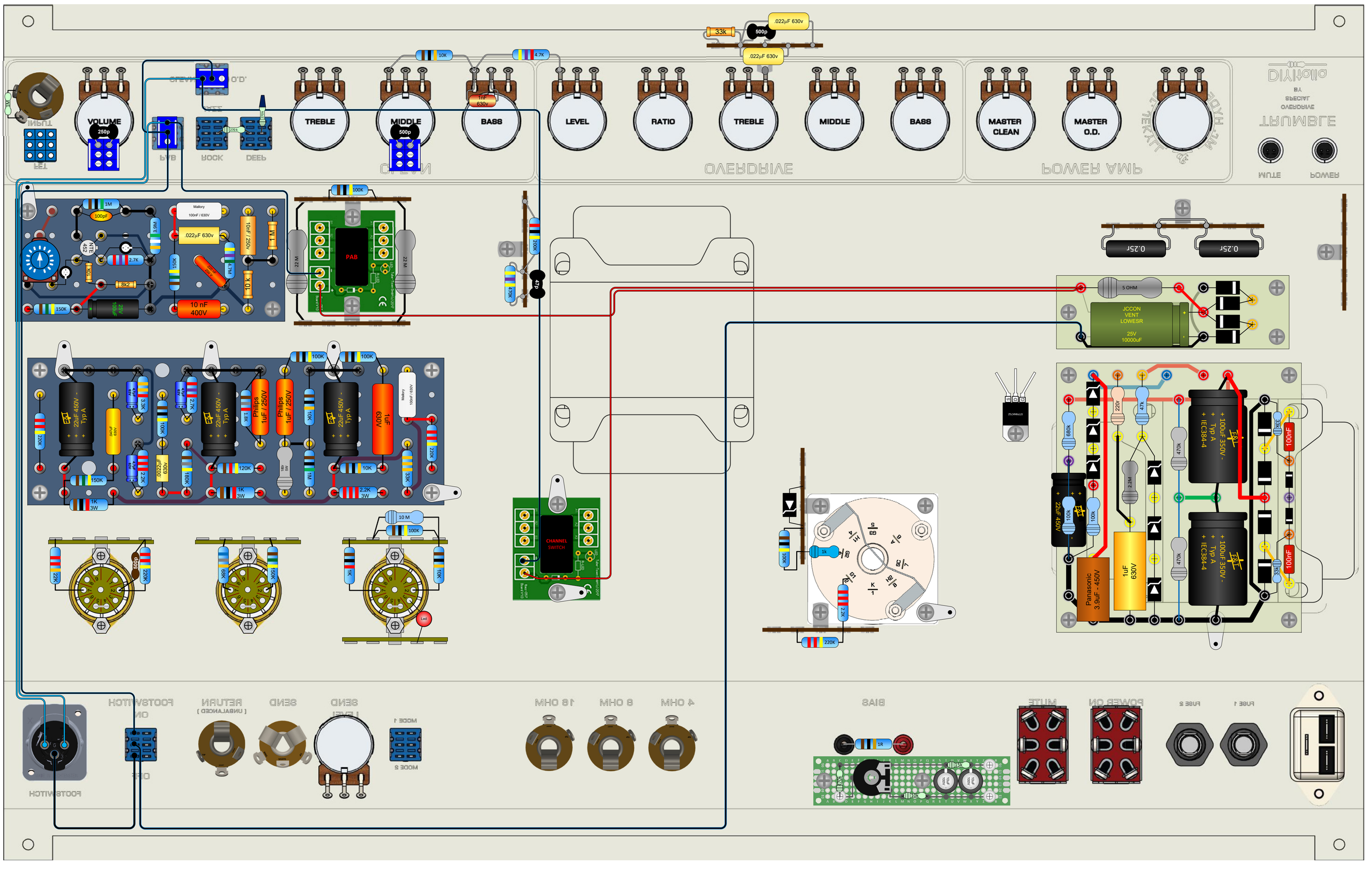
VOLUME
250p
TREBLE
MIDDLE
500p
BASS
LEVEL
RATIO
TREBLE
MIDDLE
BASS
MASTER CLEAN
MASTER O.D.
10K
4.7K
1nF 630v
33k
500p
.022µF 630v
.022µF 630v
PAB
CHANNEL SWITCH
JCCON VENT LOWESR 25V 10000uF
5 OHM
0.25r
0.25r
Panasonic 3.9uF - 450V
1uF 630V
100uF 350V
22uF 450V
Philips 1uF / 250V
Mallory 100nF / 630V
.022µF 630v
10 nF 400V
NTE 452
Led