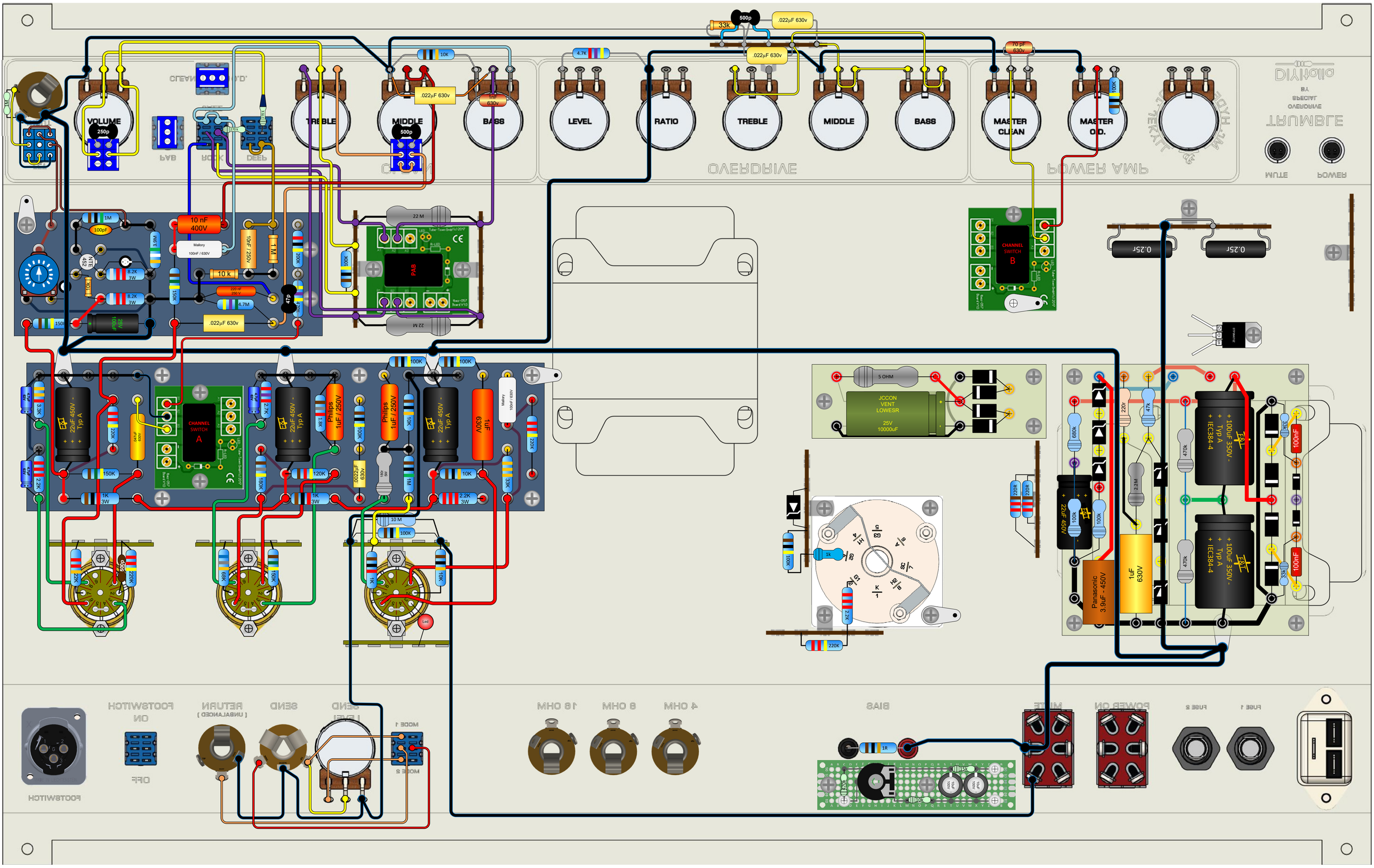
VOLUME
250p
TREBLE
MIDDLE
500p
BASS
LEVEL
RATIO
TREBLE
MIDDLE
BASS
MASTER CLEAN
MASTER O.D.
OVERDRIVE
POWER AMP
10K
.022µF 630v
1nF 630v
4.7K
33k
500p
.022µF 630v
.022µF 630v
70 pF 630v
100K
10 nF 400V
Mallory 100nF / 630V
10 k
4.7M
.022µF 630v
47p
22 M
PAB
CHANNEL SWITCH B
0.25r
0.25r
CHANNEL SWITCH A
22uF 450V - Typ A
Philips 1uF / 250V
1uF 630V
Mallory 100nF / 630V
5 OHM
JCCON VENT LOWESR 25V 10000uF
100uF 350V - Typ A IEC384-4
Panasonic 3.9uF - 450V
1uF 630V
22uF 450V
100nF
680k
470k
220r
47k
22M
FOOTSWITCH
ON
OFF
RETURN
(UNBALANCED)
SEND
SEND LEVEL
MODE 1
MODE 2
4 OHM
8 OHM
16 OHM
BIAS
MUTE
POWER ON
FUSE 1
FUSE 2