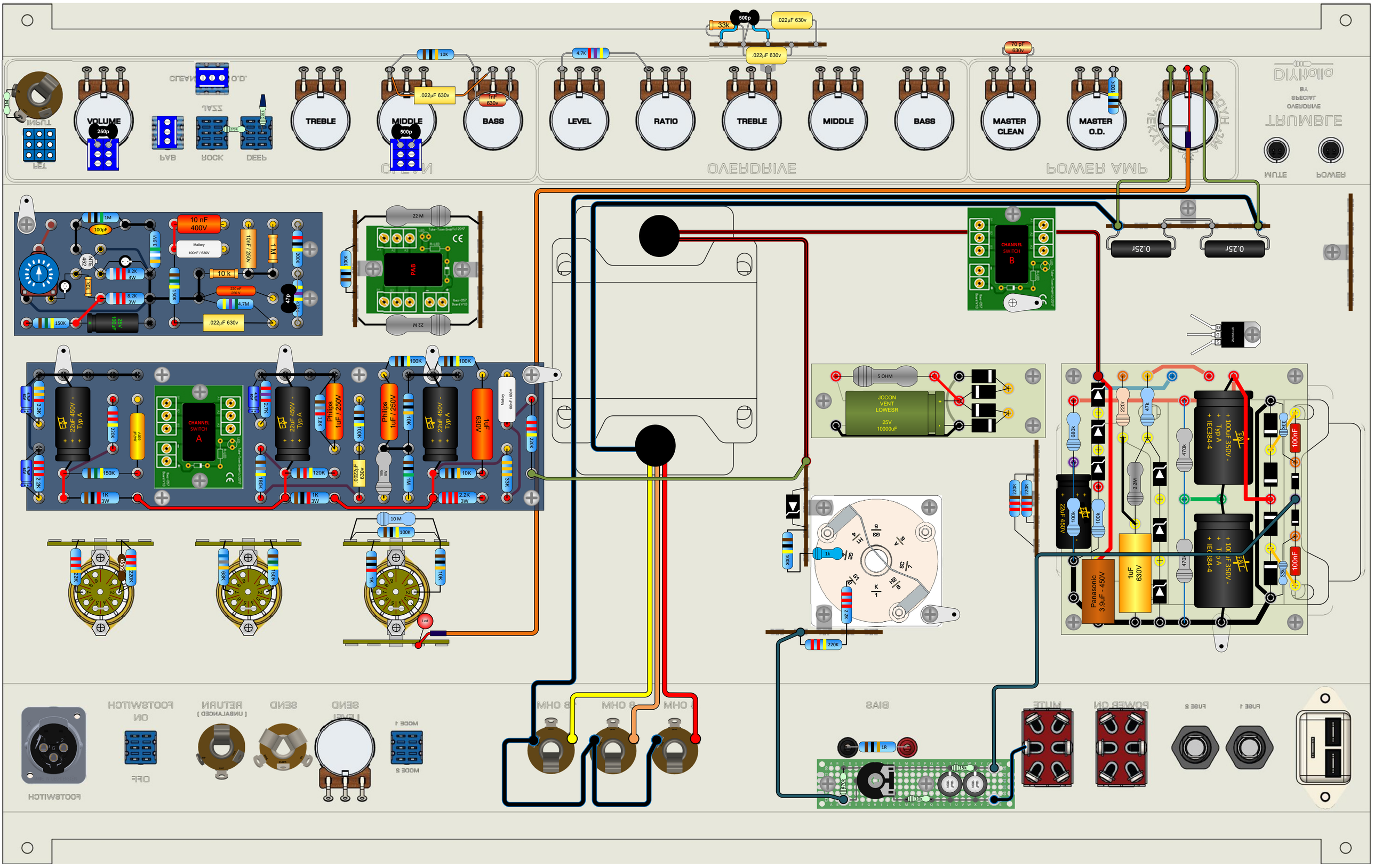
VOLUME
250p
CLEAN
O.D.
JAZZ
BAB
ROCK
DEEP
TREBLE
MIDDLE
500p
10K
.022µF 630v
BASS
1nF 630v
LEVEL
4.7K
RATIO
TREBLE
MIDDLE
BASS
33K
500p
.022µF 630v
.022µF 630v
MASTER CLEAN
MASTER O.D.
70 pF 630v
100K
POWER AMP
OVERDRIVE
CLEAN
INPUT
TRIMBLE
MUTE
POWER
10 nF 400V
Mallory 100nF / 630V
10nF / 250V
1 M
200K
10 k
220 nF 250 V
4.7M
47p
.022µF 630v
150K
100K
150K
22 M
PAB
CHANNEL SWITCH B
0.25r
0.25r
CHANNEL SWITCH A
22uF 450V - Typ A
Philips 1uF / 250V
1uF 630V
Mallory 100nF / 630V
.0022uF 630v
10 M
5 OHM
JCCON VENT LOWESR 25V 10000uF
100uF 350V - Typ A IEC384-4
Panasonic 3.9uF - 450V
1uF 630V
680k
220r
47k
470k
2.2M
100nF
FOOTSWITCH
ON
OFF
RETURN
(UNBALANCED)
SEND
MODE 1
MODE 2
8 OHM
BIAS
MUTE
POWER ON
FUSE 2
FUSE 1