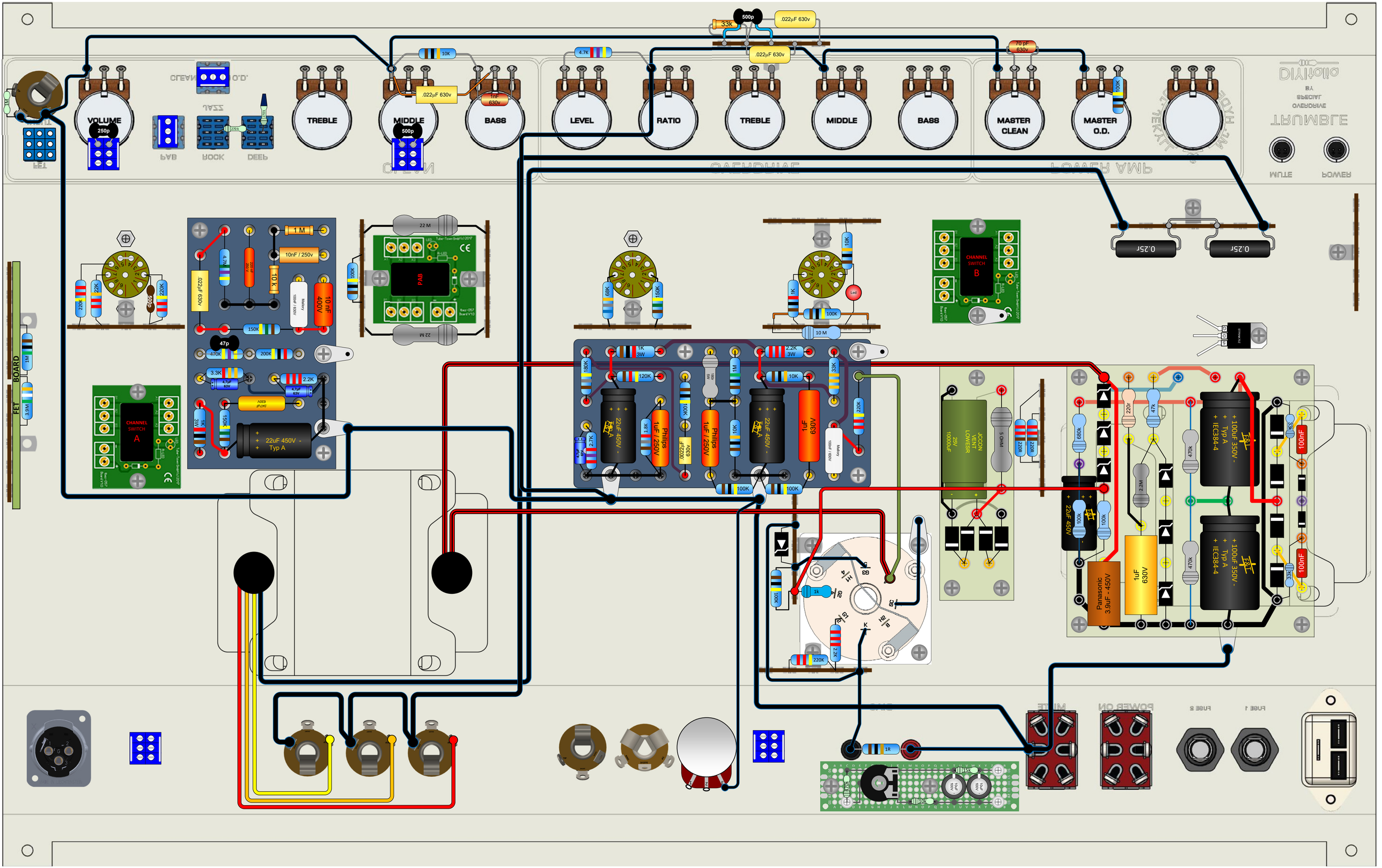
VOLUME
250p
TREBLE
MIDDLE
500p
BASS
LEVEL
RATIO
TREBLE
MIDDLE
BASS
MASTER CLEAN
MASTER O.D.
33k
500p
.022µF 630v
10K
.022µF 630v
1nF 630v
4.7K
.022µF 630v
70 pF 630v
100K
CLEAN
O.D.
FAT
ROCK
DEEP
CLEAN
OVERDRIVE
LOWER AMP
MUTE
POWER
0.25r
0.25r
1 M
10nF / 250v
10 K
10 nF 400V
150K
200K
470K
3.3K
2.2K
22uF 450V
Typ A
22 M
PAB
68K
150K
1K
10K
100K
10 M
CHANNEL SWITCH B
CHANNEL SWITCH A
220K
22K
220K
500p
FET BOARD
1M
3.9M
180K
120K
1K 3W
2.2K 3W
33K
10K
100K
22uF 450V
Philips 1uF / 250V
1uF 630V
220K
JCCON VENT LOWESR 25V 10000uF
5.0MM
220R
680k
220r
47k
470k
2.2M
22uF 450V
100k
Panasonic 3.9uF - 450V
1uF 630V
+ 100uF 350V -
Typ A
IEC384-4
33K
100nF
1k
10K
2.2K
220K
1R
MUTE
POWER ON
FUSE 2
FUSE 1