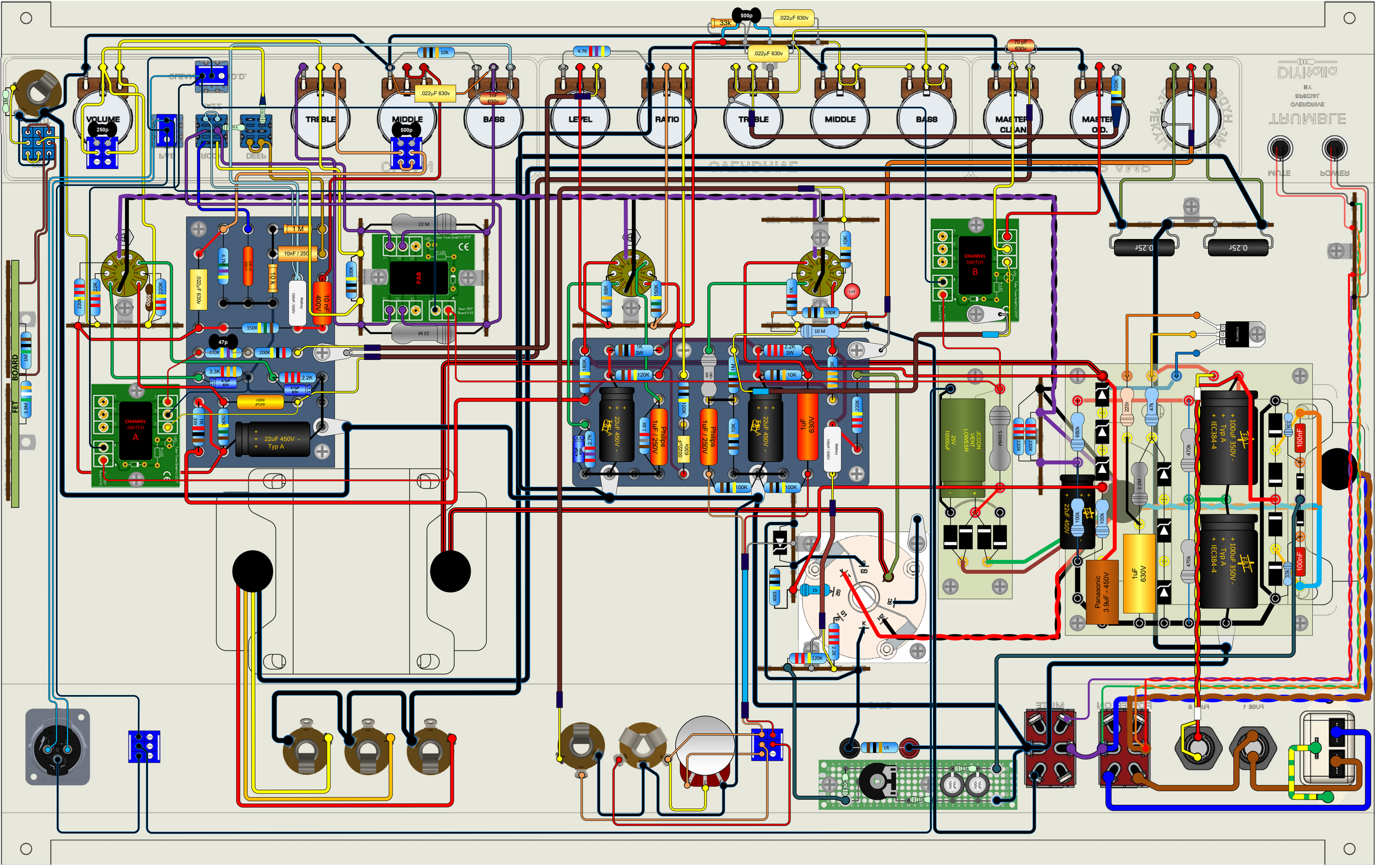
VOLUME
TREBLE
MIDDLE
BASS
LEVEL
RATIO
TREBLE
MIDDLE
BASS
MASTER CLEAN
MASTER O.D.
CHANNEL SWITCH A
CHANNEL SWITCH B
22uF 450V - Typ A
Philips 1uF / 250V
JCCON VENT LOWESR 25V 1000uF
Panasonic 3,9uF - 450V
1uF 630V
100uF 350V - Typ A IEC384-4
FET BOARD