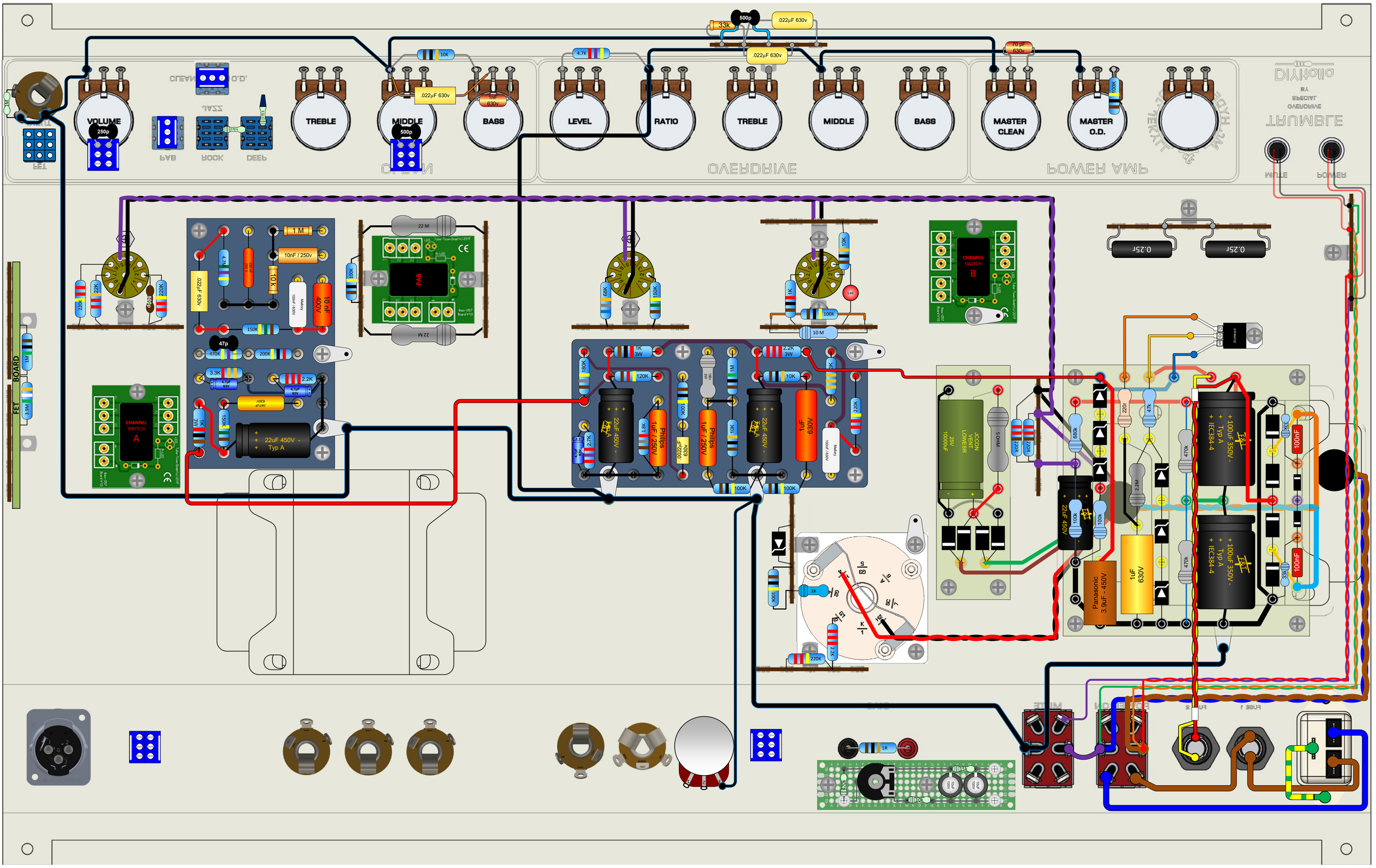
VOLUME
250p
TREBLE
MIDDLE
500p
BASS
LEVEL
RATIO
TREBLE
MIDDLE
BASS
MASTER CLEAN
MASTER O.D.
33K
500p
.022µF 630v
10K
.022µF 630v
1nF 630v
4.7K
.022µF 630v
70 pF 630v
100K
CLEAN
OVERDRIVE
POWER AMP
MUTE
POWER
0.25r
0.25r
CHANNEL SWITCH B
CHANNEL SWITCH A
PAB
22 M
22 M
1 M
10nF / 250v
10 k
10 nF 400V
150K
47p
470K
200K
3.3K
2.2K
150K
22uF 450V - Typ A
.022µF 630v
220K
22K
680K
150K
1K
10K
100K
10 M
1K 3W
120K
180K
2.7K
22uF 450V - Typ A
1K 3W
Philips 1uF / 250V
100K
.0022uF 630V
Philips 1uF / 250V
10K
22uF 450V - Typ A
1uF 630V
2.2K 3W
10K
5K
220K
100K
100K
220K
2.2K
JCCON VENT LOWESR 25V 10000uF
5.0MΩ
220R
220R
680k
220r
47k
22uF 450V
100k
100k
2.2M
470k
470k
Panasonic 3.9uF - 450V
1uF 630V
+ 100uF 350V - Typ A + IEC384-4
+ 100uF 350V - Typ A + IEC384-4
33K
100nF
33K
100nF
FET
BOARD
1M
3.9M
1R
10K
10K
10K
10uF 100V
10uF 100V
FUSE 1
FUSE 2
MUTE
POWER