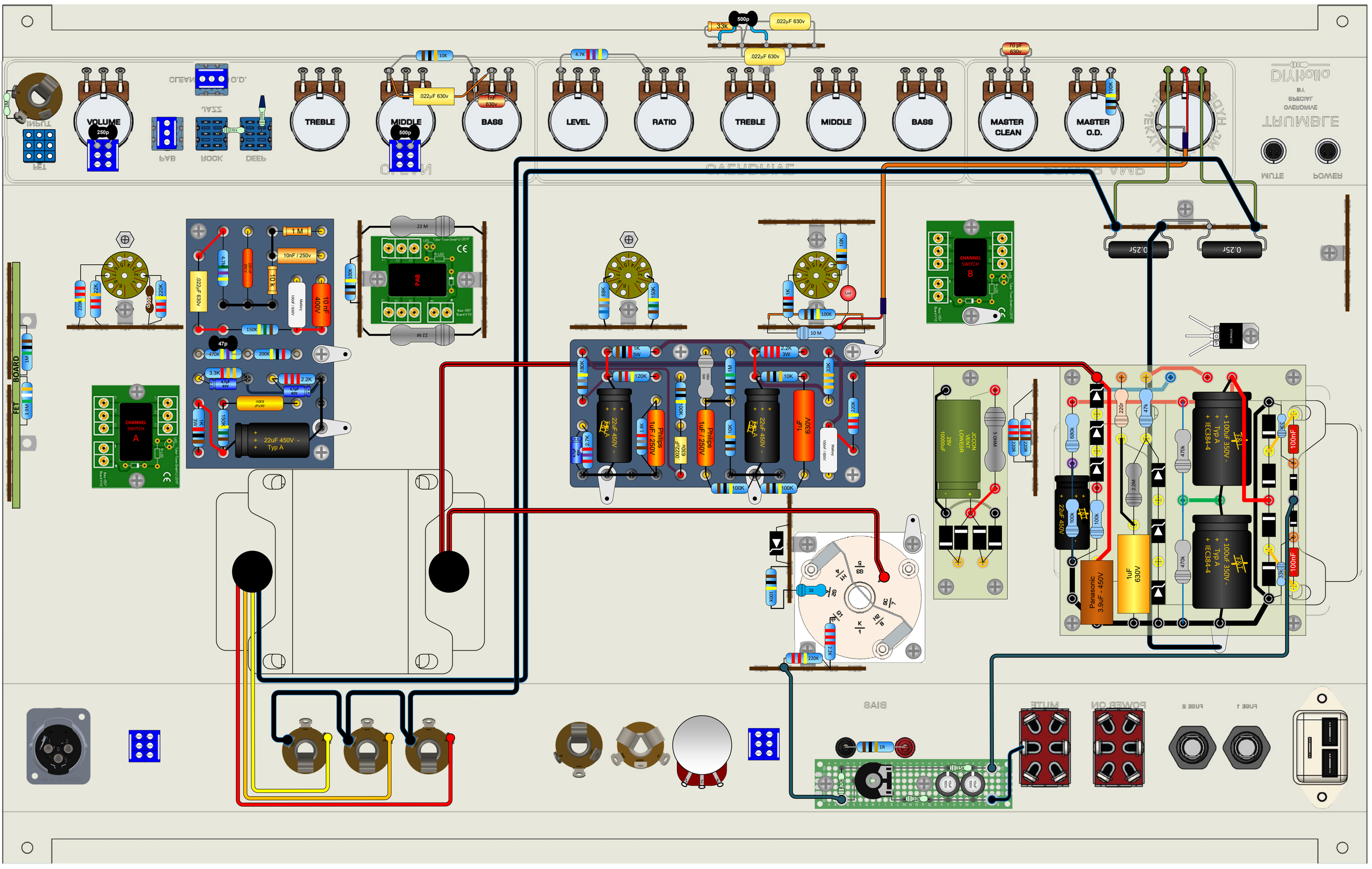
VOLUME
250p
TREBLE
MIDDLE
500p
BASS
LEVEL
RATIO
TREBLE
MIDDLE
BASS
MASTER CLEAN
MASTER O.D.
10K
.022µF 630v
1nF 630v
4.7K
33K
500p
.022µF 630v
.022µF 630v
70 pF 630v
100K
MUTE
POWER
0.25r
0.25r
CHANNEL SWITCH A
CHANNEL SWITCH B
PAB
1 M
10nF / 250v
10 nF 400V
150K
47p
470K
200K
3.3K
2.2K
22uF 450V Typ A
22 M
10 M
68K
150K
1K
100K
Led
180K
120K
1K 3W
22uF 450V
Philips 1uF / 250V
1uF 630V
2.2K 3W
33K
10K
220K
JCCON VENT LOWESR 25V 10000uF
5 OHM
680k
220r
47k
470k
100uF 350V Typ A IEC384-4
100nF
Panasonic 3.9uF - 450V
1uF 630V
22uF 450V
FET BOARD
1M
3.9M
BIAS
1R
MUTE
POWER ON
FUSE 2
FUSE 1