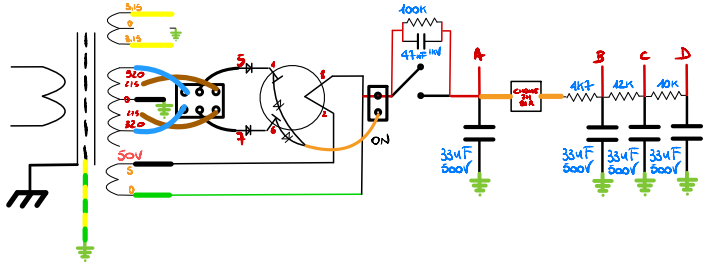
100K
47nF 1kV
A
B
C
D
4K7
12K
10K
33uF 500V
33uF 500V
33uF 500V
33uF 500V
ON
50V

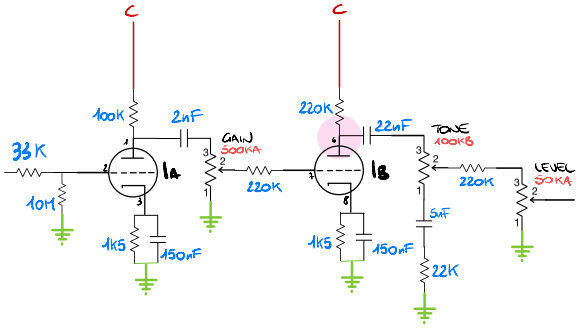
C
C
100K
2nF
33K
10M
1A
1K5
150nF
GAIN
500KA
220K
220K
22nF
1B
1K5
150nF
TONE
100KB
220K
5nF
22K
LEVEL
50KA

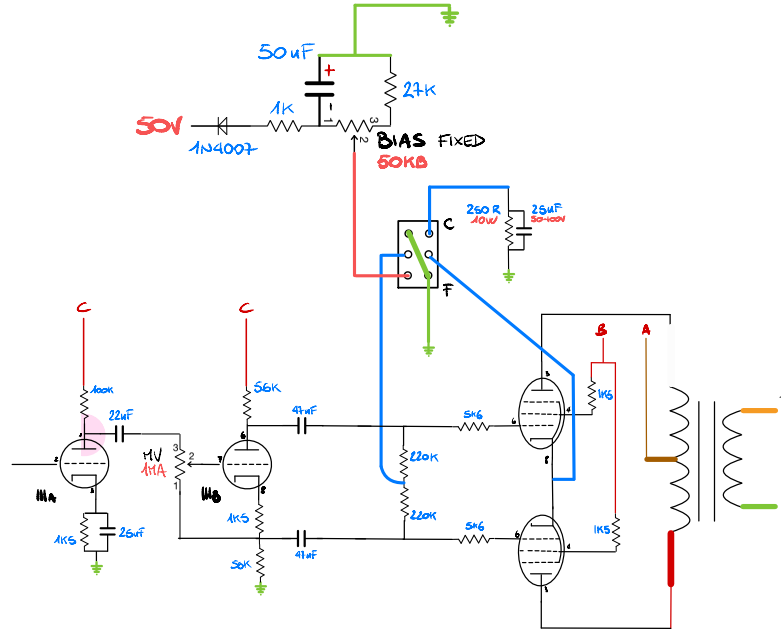
50uF
27K
50V
1K
1N4007
BIAS FIXED
50KB
250R
10W
25uF
50-100V
C
F
C
C
100K
22uF
MV
1MA
1MA
1K5
25uF
56K
47nF
1MB
1K5
50K
47nF
5K6
220K
220K
5K6
B
A
1K6
1K5

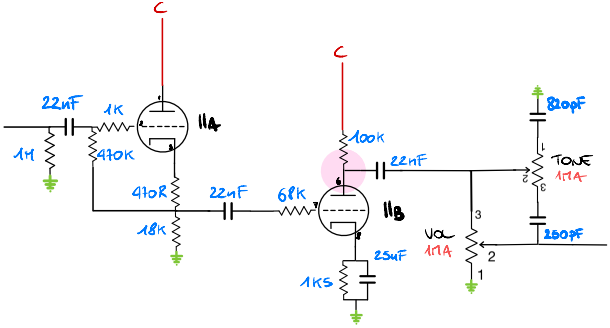
C
C
22uF
1K
1M
470K
2A
470R
22nF
18K
68K
100K
22nF
2B
25uF
1K5
820pF
TONE
1MA
250pF
VOL
1MA