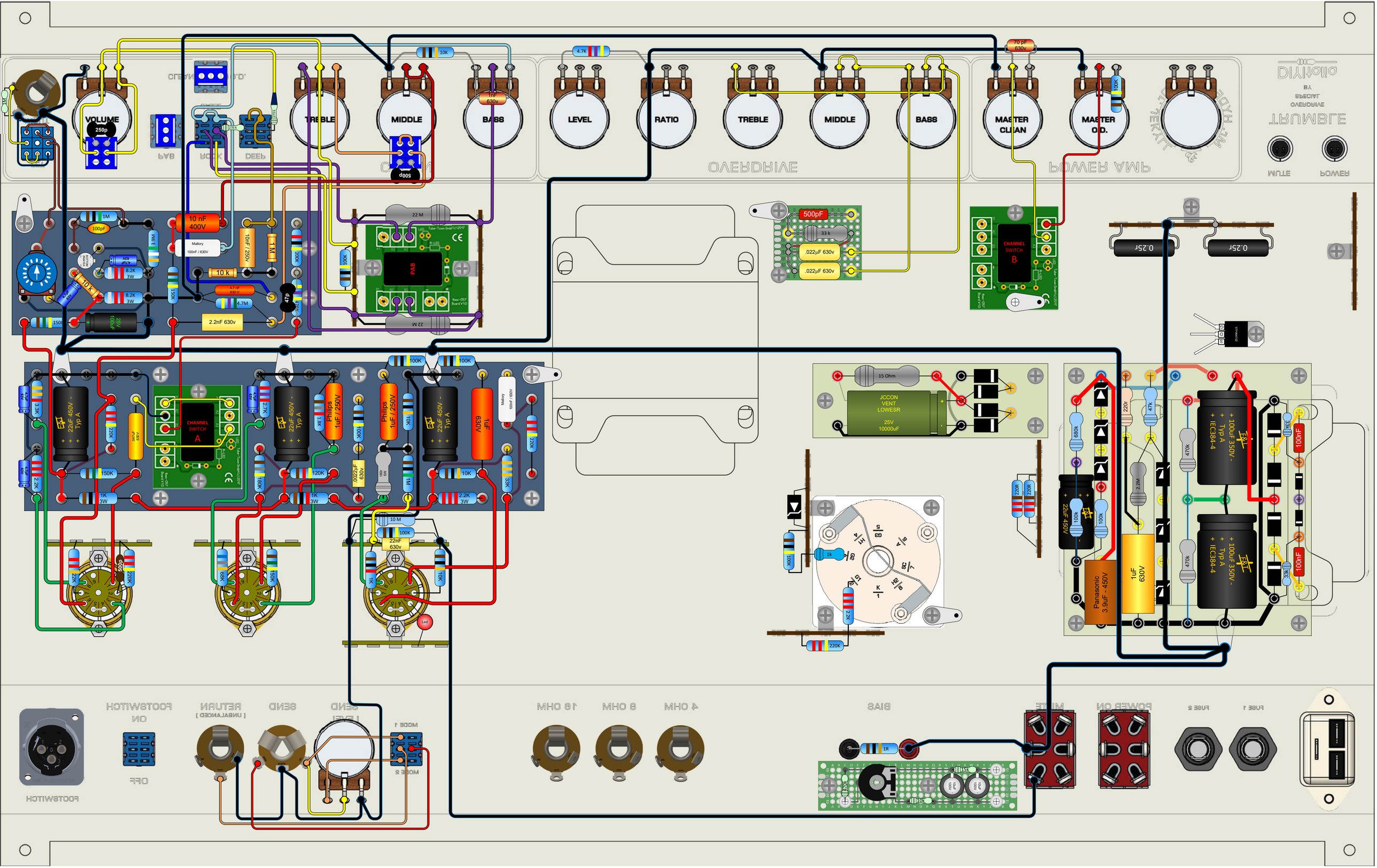
VOLUME
250p
TREBLE
MIDDLE
500p
BASS
10K
4.7K
LEVEL
RATIO
TREBLE
MIDDLE
BASS
70 pF 630v
MASTER CLEAN
MASTER O.D.
100K
OVERDRIVE
POWER AMP
MUTE
POWER
10 nF 400V
Mallory 100nF / 630V
10nF /250V
1M
10 k
4.7 nF 630 V
4.7M
2.2nF 630v
47p
22 M
PAB
500pF
33 k
.022µF 630v
.022µF 630v
CHANNEL SWITCH B
0.25r
0.25r
CHANNEL SWITCH A
22uF 450V - Typ A
Philips 1uF / 250V
1uF 630V
Mallory 100nF / 630V
15 Ohm
JCCON VENT LOWESR 25V 10000uF
220r
47k
680k
470k
2.2M
22uF 450V
100uF 350V - Typ A IEC384-4
Panasonic 3.9uF - 450V
1uF 630V
100nF
10nF
220K
68K
150K
120K
10 M
220nF 630v
Led
1R
10uF 100V
FOOTSWITCH
ON
OFF
RETURN
(UNBALANCED)
SEND
SEND
(LEVEL)
MODE 1
MODE 2
4 OHM
8 OHM
16 OHM
BIAS
MUTE
POWER ON
FUSE 2
FUSE 1