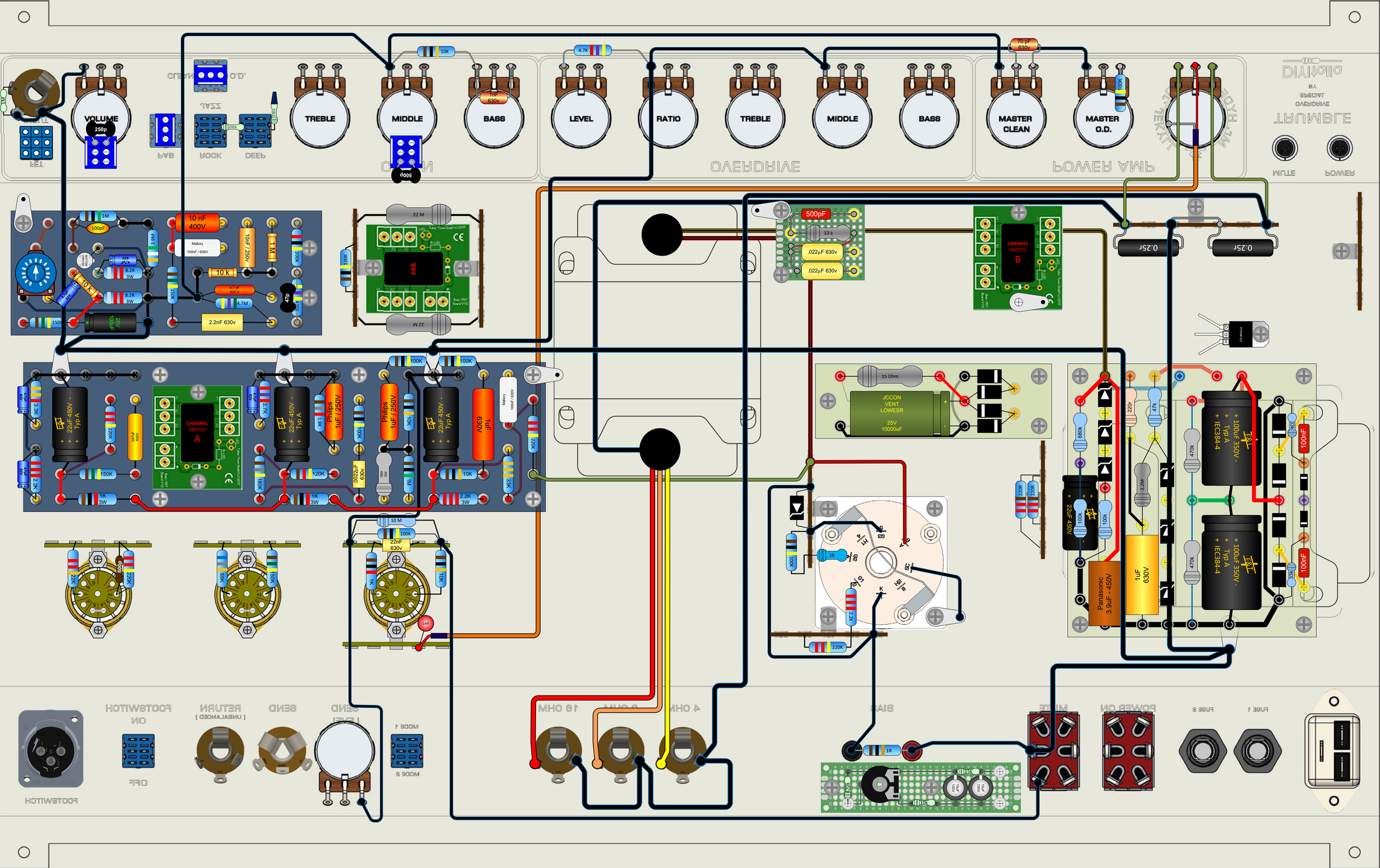
VOLUME
250p
TREBLE
MIDDLE
BASS
LEVEL
RATIO
TREBLE
MIDDLE
BASS
MASTER CLEAN
MASTER O.D.
10K
4.7K
1nF 630v
70 pF 630v
100K
500p
OVERDRIVE
POWER AMP
MUTE
POWER
10 nF 400V
Mallory 100nF / 630V
10nF /250V
1 M
10 k
47 nF 630 V
4.7M
2.2nF 630v
8.2K 3W
8.2K 3W
3.9M
150K
47p
PAB
22 M
500pF
33 k
.022µF 630v
.022µF 630v
CHANNEL SWITCH B
0.25r
0.25r
CHANNEL SWITCH A
22uF 450V - Typ A
Philips 1uF / 250V
1uF 630V
Mallory 100nF / 630V
15 Ohm
JCCON VENT LOWESR 25V 10000uF
680K
220r
47k
470k
2.2M
22uF 450V
100k
Panasonic 3.9uF - 450V
1uF 630V
100uF 350V - Typ A IEC384-4
100nF
330K
10 M
22nF 630v
Led
1K
2.2K
220K
1R
10K
FOOTSWITCH
ON
OFF
RETURN
(UNBALANCED)
SEND
SEND LEVEL
MODE 1
MODE 2
8 OHM
16 OHM
4 OHM
BIAS
MUTE
POWER ON
FUSE 1
FUSE 2