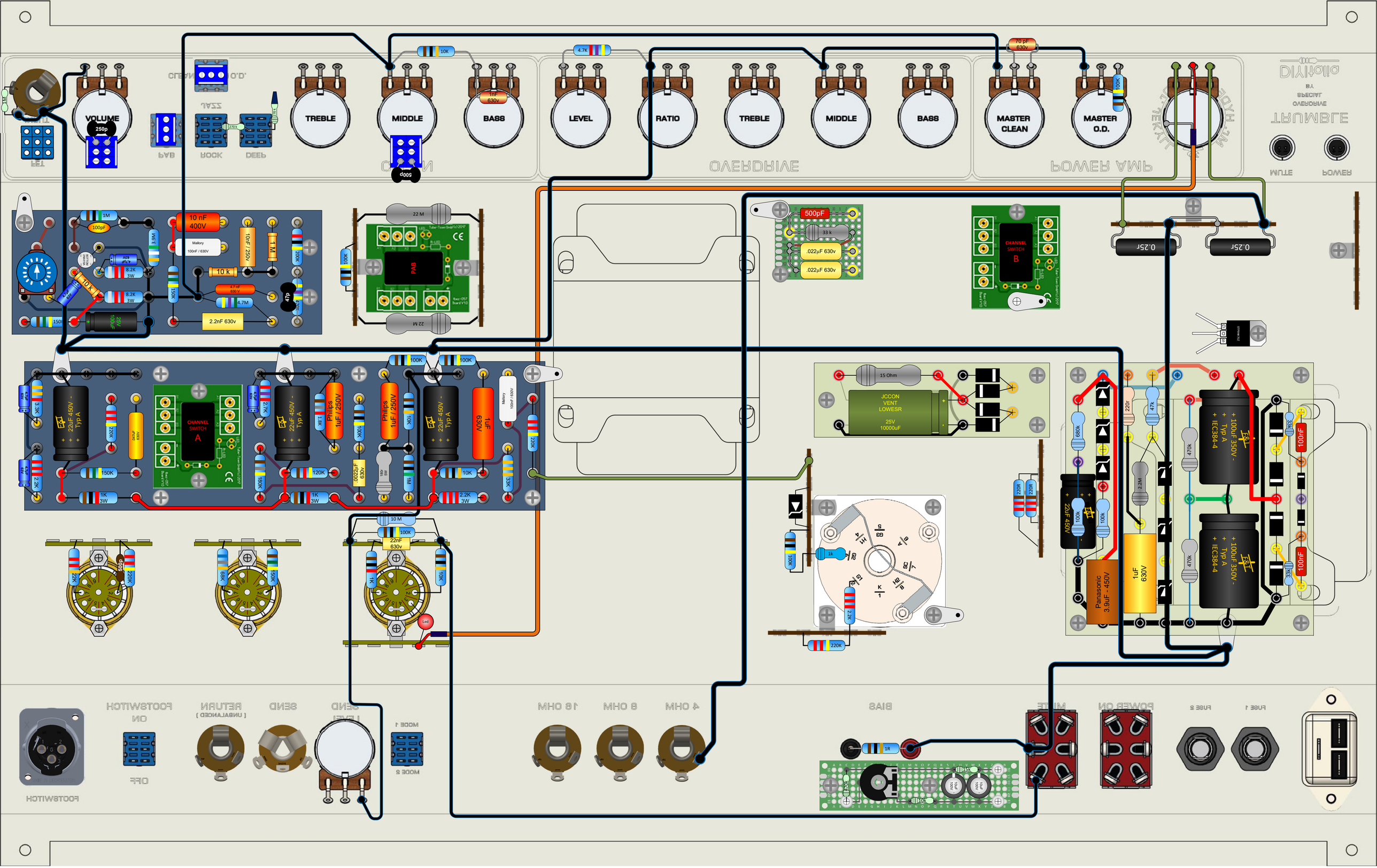
VOLUME
250p
TREBLE
MIDDLE
500p
BASS
LEVEL
RATIO
TREBLE
MIDDLE
BASS
MASTER CLEAN
MASTER O.D.
10K
4.7K
1nF 630v
70 pF 630v
100K
OVERDRIVE
POWER AMP
MUTE
POWER
10 nF 400V
Mallory 100nF / 630V
10uF /250V
1 M
10 k
4.7M
2.2nF 630v
47p
8.2K 3W
3.9M
200K
150K
22 M
PAB
CHANNEL SWITCH A
CHANNEL SWITCH B
22uF 450V - Typ A
Philips 1uF / 250V
1uF 630V
Mallory 100nF / 630V
120K
180K
1K 3W
2.7K
2.2K 3W
10K
36K
220K
.0022uF 630v
10 M
22nF 630v
68K
500pF
33 k
.022µF 630v
15 Ohm
JCCON VENT LOWESR 25V 10000uF
680K
220r
47k
470k
2.2M
100k
Panasonic 3.9uF - 450V
1uF 630V
+ 100uF 350V - Typ A + IEC384-4
100nF
330K
0.25r
FOOTSWITCH
OFF
ON
RETURN
(UNBALANCED)
SEND
LEVEL
MODE 1
MODE 2
4 OHM
8 OHM
16 OHM
BIAS
1R
MUTE
POWER ON
FUSE 1
FUSE 2