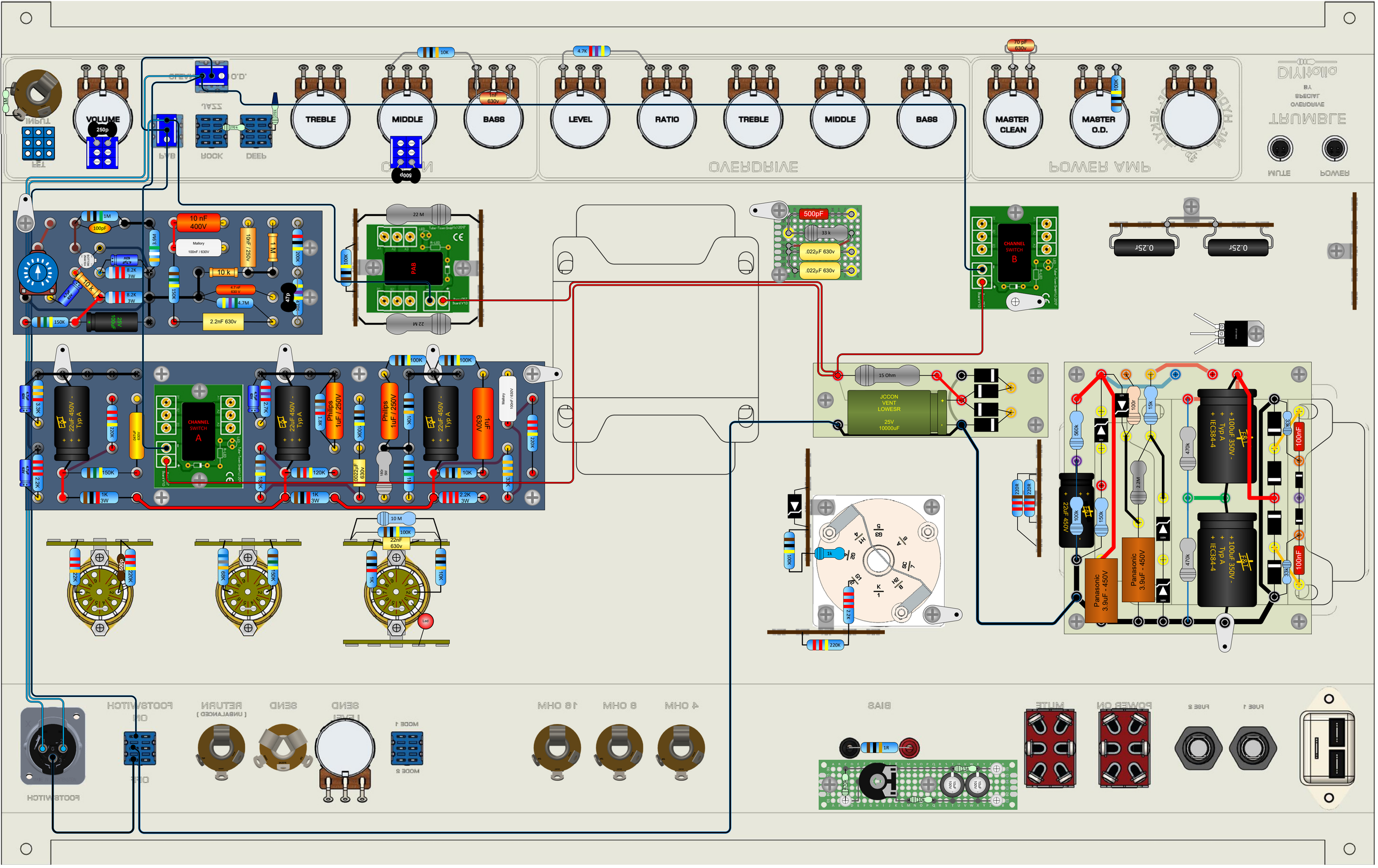
VOLUME
250p
TREBLE
MIDDLE
BASS
LEVEL
RATIO
TREBLE
MIDDLE
BASS
MASTER CLEAN
MASTER O.D.
OVERDRIVE
POWER AMP
10K
4.7K
70 pF 630v
1nF 630v
500p
100K
1M
100pF
10 nF 400V
Mallory 100nF / 630V
10nF /250V
1 M
10 k
4.7 nF 630 V
4.7M
2.2nF 630v
47p
150K
22 M
PAB
500pF
33 k
.022µF 630v
CHANNEL SWITCH B
0.25r
15 Ohm
JCCON VENT LOWESR 25V 10000uF
22uF 450V - Typ A
CHANNEL SWITCH A
Philips 1uF / 250V
1uF 630V
Mallory 100nF / 630V
10 M
22nF 630v
Panasonic 3.9uF - 450V
100uF 350V - Typ A IEC384-4
100nF
560k
15k
470K
220K
1R
BIAS
MUTE
POWER ON
FUSE 2
FUSE 1
4 OHM
8 OHM
16 OHM
SEND LEVEL
SEND
RETURN (UNBALANCED)
FOOTSWITCH ON
OFF
FOOTSWITCH