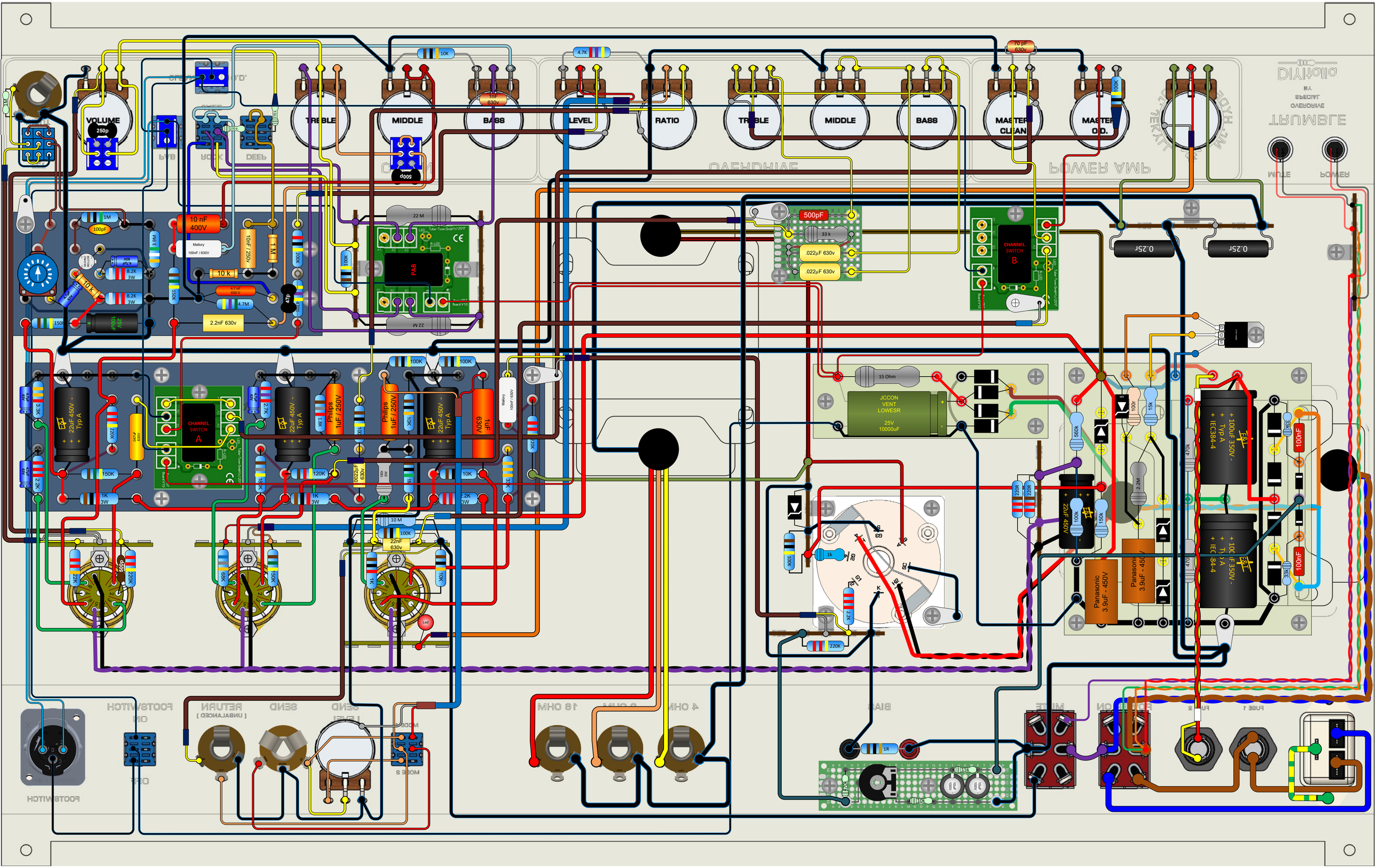
VOLUME
250p
TREBLE
MIDDLE
BASS
LEVEL
RATIO
TREBLE
MIDDLE
BASS
MASTER CLEAN
MASTER O.D.
10K
4.7K
70 pF 630v
10 nF 400V
Mallory 100nF / 630V
10nF / 250V
1 M
10 k
4.7 nF 630 V
4.7M
2.2nF 630v
47p
22 M
PAB
500pF
33 k
.022µF 630v
.022µF 630v
CHANNEL SWITCH B
0.25r
0.25r
CHANNEL SWITCH A
22uF 450V - Typ A
Philips 1uF / 250V
11uF 630V
Mallory 100nF / 630V
10 M
22nF 630v
15 Ohm
JCCON VENT LOWESR 25V 10000uF
560k
15k
100r
470k
220R
22uF 450V
Panasonic 3.9uF - 450V
100uF 350V - Typ A IEC384-4
100nF
33k
1R
10uF 100V
15k
10K