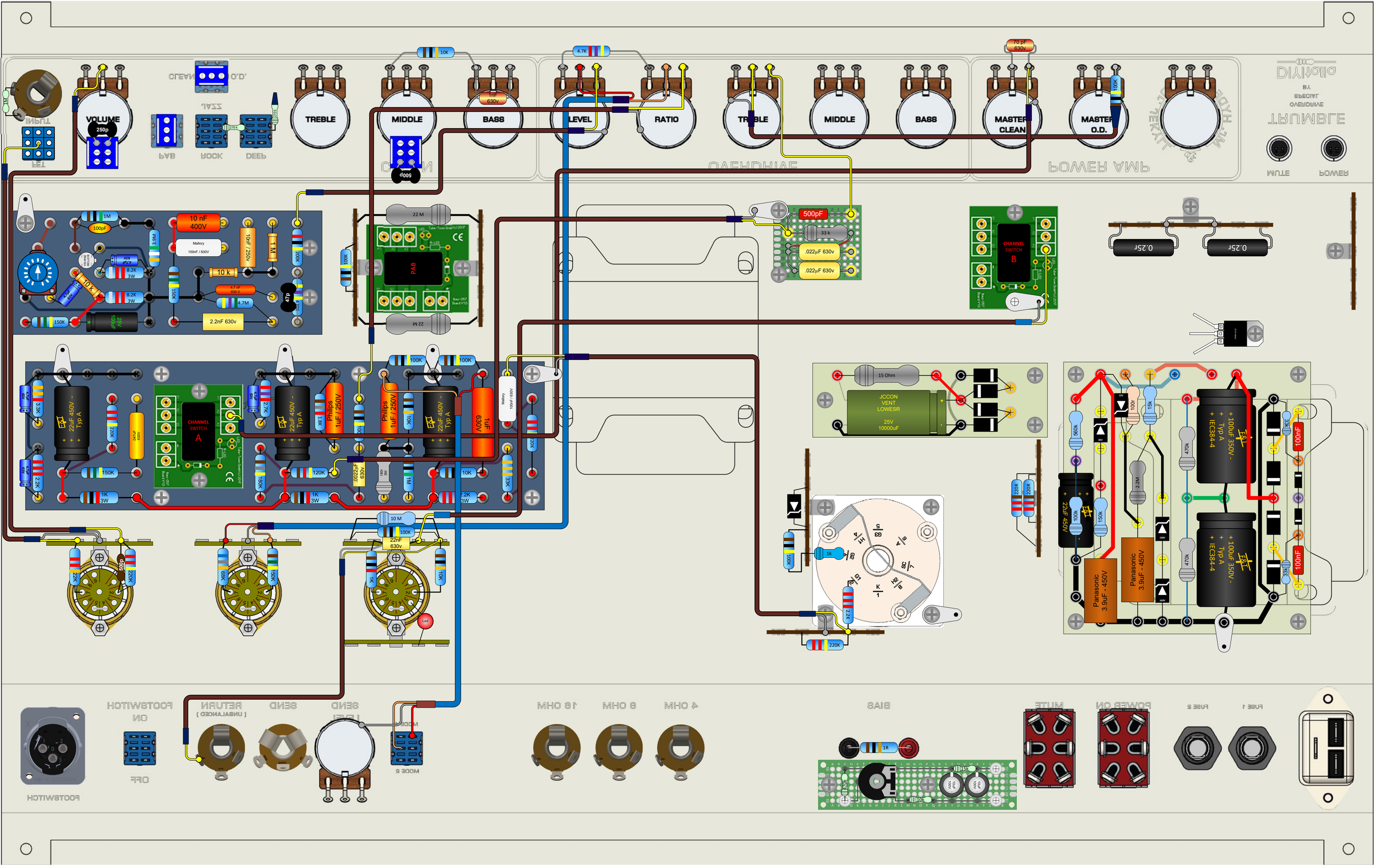
VOLUME
250p
TREBLE
MIDDLE
BASS
LEVEL
RATIO
TREBLE
MIDDLE
BASS
MASTER CLEAN
MASTER O.D.
10K
4.7K
70 pF 630v
100K
1nF 630v
500p
CLEAN
O.D.
BAS
ROCK
DEEP
INPUT
FET
OVERDRIVE
POWER AMP
MUTE
POWER
TRUMBLE
DIVITOLO
SPECIAL
OVERDRIVE
BY
10 nF 400V
Mallory 100nF / 630V
10uF /250V
1 M
200K
10 k
47 nF 630 V
4.7M
2.2nF 630v
47p
150K
22uF 250V
1M
100pF
3.9M
8.2K 3W
10 K
22 M
PAB
500pF
33 k
.022µF 630v
.022µF 630v
CHANNEL SWITCH B
0.25r
0.25r
CHANNEL SWITCH A
22uF 450V - Typ A
3.3K
2.2K
220K
150K
1K 3W
2.7K
Philips 1uF / 250V
38K
101
1K
1uF 630V
Mallory 100nF / 630V
120K
180K
.0022uF 630v
1M
10K
36K
10 M
22nF 630v
68K
15 Ohm
JCCON VENT LOWESR 25V 10000uF
220R
560K
100r
15k
470K
2.2M
100uF 350V - Typ A IEC384-4
100nF
Panasonic 3.9uF - 450V
1R
10uF 100V
FOOTSWITCH
ON
OFF
SEND
RETURN
(UNBALANCED)
MODE 2
8 OHM
16 OHM
BIAS
MUTE
POWER ON
FUSE 2
FUSE 1