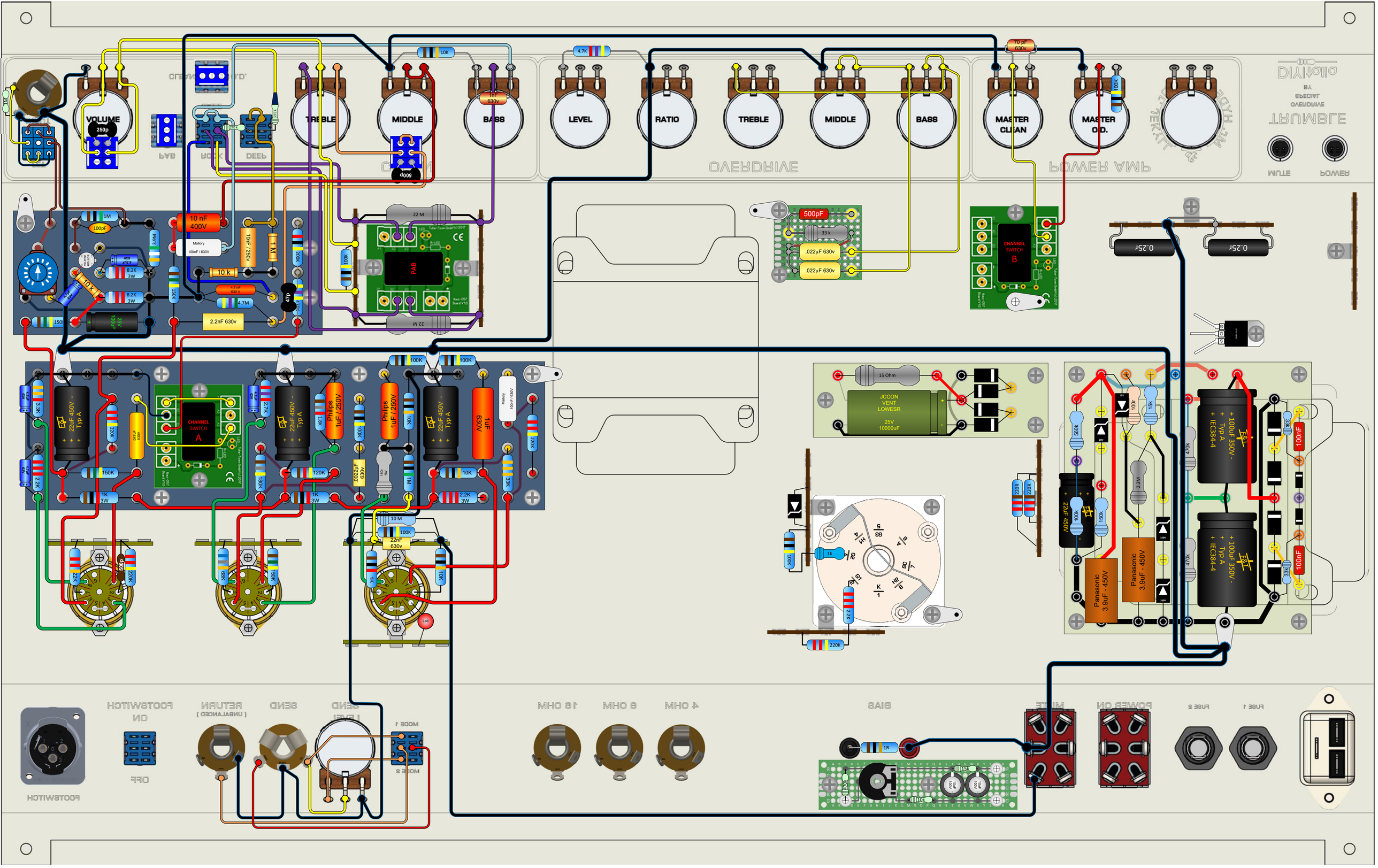
VOLUME
250p
TREBLE
MIDDLE
500p
BASS
LEVEL
RATIO
TREBLE
MIDDLE
BASS
MASTER CLEAN
MASTER O.D.
10K
4.7K
1nF 630v
70 pF 630v
100K
10 nF 400V
Mallory 100nF / 630V
10uF /250V
1 M
10 k
47 nF 630 V
4.7M
2.2nF 630v
47p
22 M
PAB
500pF
33 k
.022µF 630v
.022µF 630v
CHANNEL SWITCH B
0.25r
0.25r
CHANNEL SWITCH A
22uF 450V - Typ A
Philips 1uF / 250V
1uF 630V
Mallory 100nF / 630V
.022uF 630v
10 M
220nF 630v
Led
15 Ohm
JCCON VENT LOWESR 25V 10000uF
+ 100uF 350V - Typ A + IEC384-4
Panasonic 3.9uF - 450V
22uF 450V
100nF
4 OHM
8 OHM
16 OHM
BIAS
1R
10uF 100V
FOOTSWITCH
ON
OFF
RETURN
(UNBALANCED)
SEND
SEND
(LEVEL)
MODE 1
MODE 2
MUTE
POWER ON
FUSE 2
FUSE 1