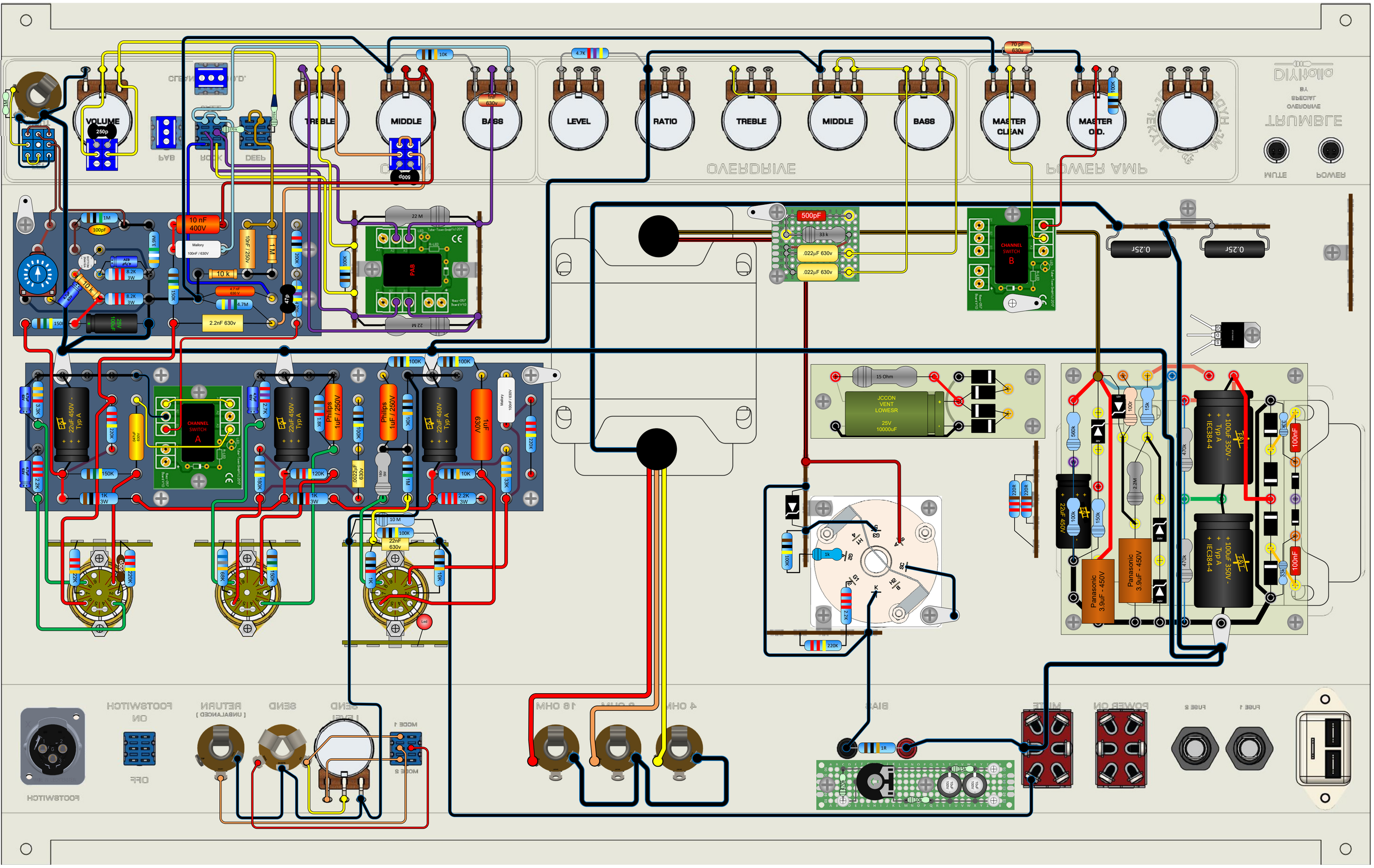
VOLUME
250p
TREBLE
MIDDLE
500p
BASS
10K
1nF 630v
LEVEL
RATIO
TREBLE
MIDDLE
BASS
4.7K
MASTER CLEAN
MASTER O.D.
70 pF 630v
100K
OVERDRIVE
POWER AMP
MUTE
POWER
10 nF 400V
Mallory 100nF / 630V
10nF / 250V
1 M
10 k
4.7 nF 630 V
4.7M
2.2nF 630v
47p
22 M
PAB
500pF
33 k
.022µF 630v
.022µF 630v
CHANNEL SWITCH B
0.25r
0.25r
CHANNEL SWITCH A
22uF 450V - Typ A
Philips 1uF / 250V
1uF 630V
Mallory 100nF / 630V
2.2nF 630v
22nF 630v
10 M
100K
Led
15 Ohm
JCCON VENT LOWESR 25V 10000uF
100uF 350V - Typ A IEC384-4
Panasonic 3.9uF - 450V
22uF 450V
100nF
470k
220R
1R
10uF 100V
FOOTSWITCH
ON
OFF
RETURN
SEND
MODE 1
MODE 2
8 OHM
4 OHM
BIAS
MUTE
POWER ON
FUSE 2
FUSE 1