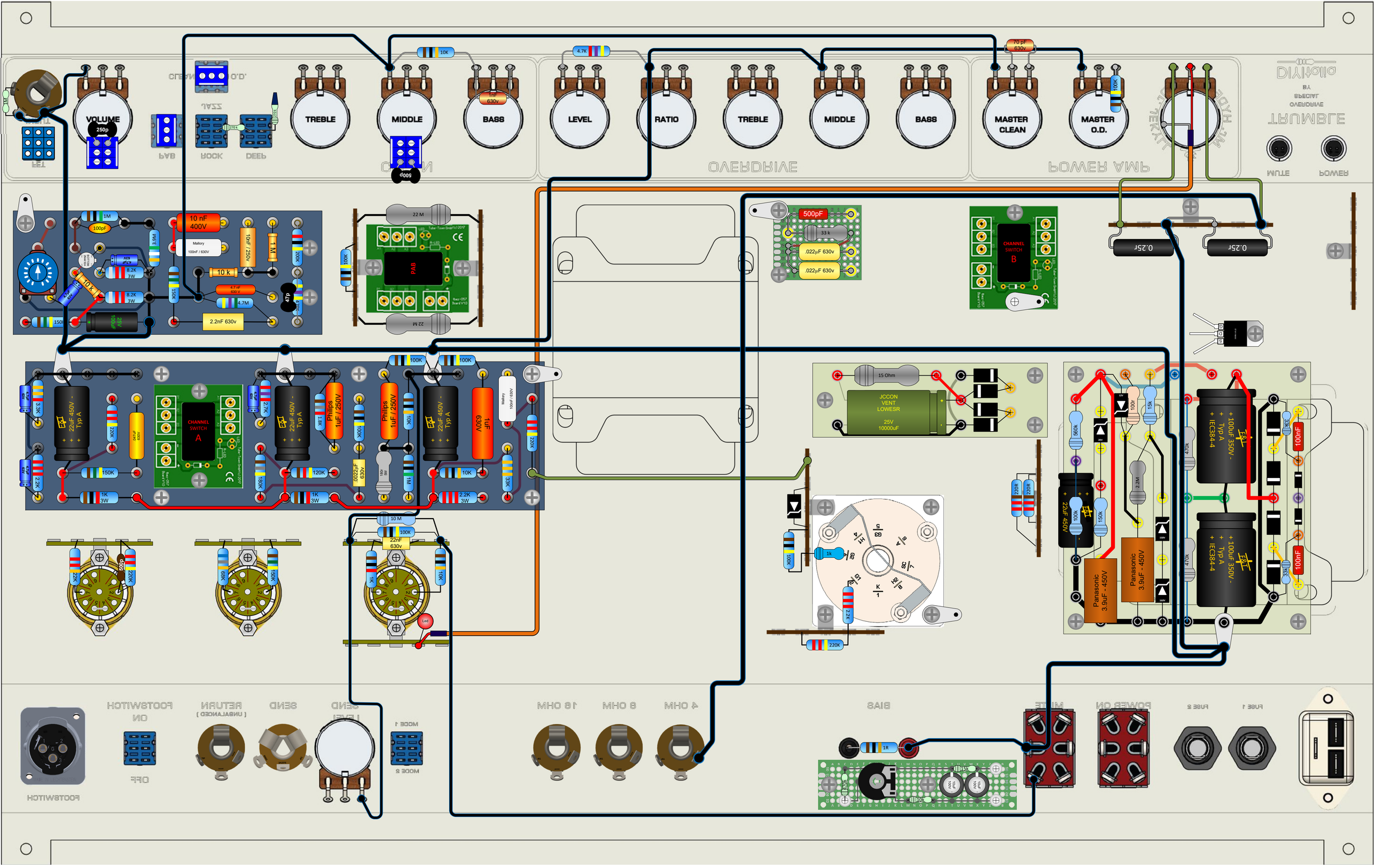
VOLUME
250p
TREBLE
MIDDLE
BASS
LEVEL
RATIO
TREBLE
MIDDLE
BASS
MASTER CLEAN
MASTER O.D.
10K
4.7K
1nF 630v
70 pF 630v
100K
500p
OVERDRIVE
POWER AMP
MUTE
POWER
10 nF 400V
Mallory 100nF / 630V
10 k
47 nF 630 V
4.7M
2.2nF 630v
47p
22 M
PAB
500pF
33 k
.022µF 630v
.022µF 630v
CHANNEL SWITCH B
0.25r
0.25r
CHANNEL SWITCH A
22uF 450V - Typ A
Philips 1uF / 250V
1uF 630V
Mallory 100nF / 630V
15 Ohm
JCCON VENT LOWESR 25V 10000uF
100uF 350V - Typ A IEC384-4
Panasonic 3.9uF - 450V
22uF 450V
100nF
22nF 630v
10 M
FOOTSWITCH
ON
OFF
RETURN
(UNBALANCED)
SEND
SEND
(LEVEL)
MODE 1
MODE 2
8 OHM
16 OHM
4 OHM
BIAS
1R
MUTE
POWER ON
FUSE 2
FUSE 1