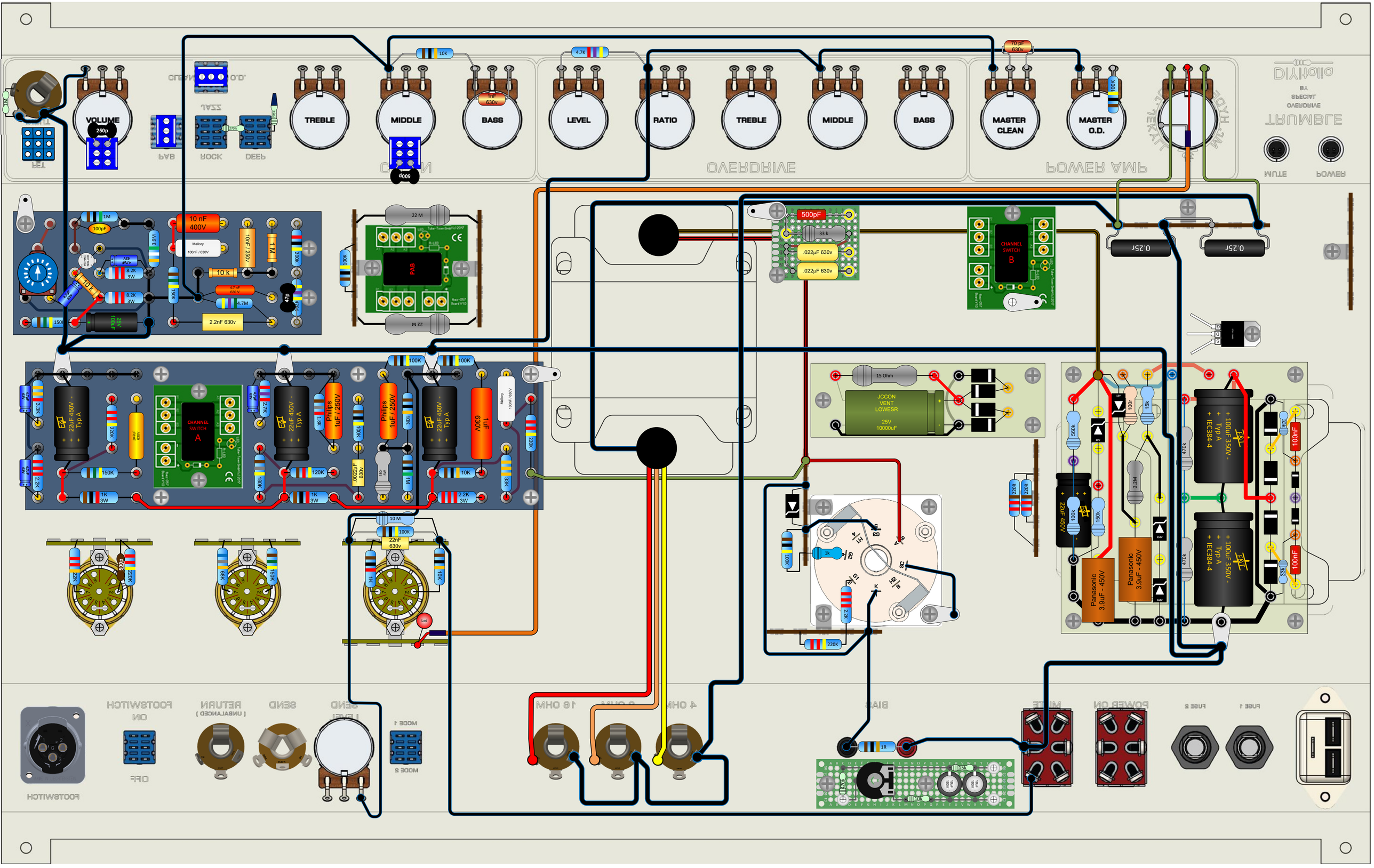
VOLUME
250p
TREBLE
MIDDLE
BASS
10K
4.7K
LEVEL
RATIO
TREBLE
MIDDLE
BASS
70 pF 630v
MASTER CLEAN
MASTER O.D.
100K
OVERDRIVE
POWER AMP
10 nF 400V
Mallory 100nF / 630V
10nF / 250V
1 M
10 k
2.2nF 630v
22 M
PAB
500pF
33 k
.022µF 630v
CHANNEL SWITCH B
CHANNEL SWITCH A
22uF 450V - Typ A
Philips 1uF / 250V
1uF 630V
15 Ohm
JCCON VENT LOWESR 25V 10000uF
100uF 350V - Typ A IEC384-4
Panasonic 3.9uF - 450V
0.25r
0.25r
100nF
470k
560k
150K
100K
10K
22K
68K
220K
Led
10 M
22nF 630v
1R
220R
4 OHM
8 OHM
BIAS
MUTE
POWER ON
FUSE 1
FUSE 2
MODE 1
MODE 2
SEND
RETURN
FOOTSWITCH