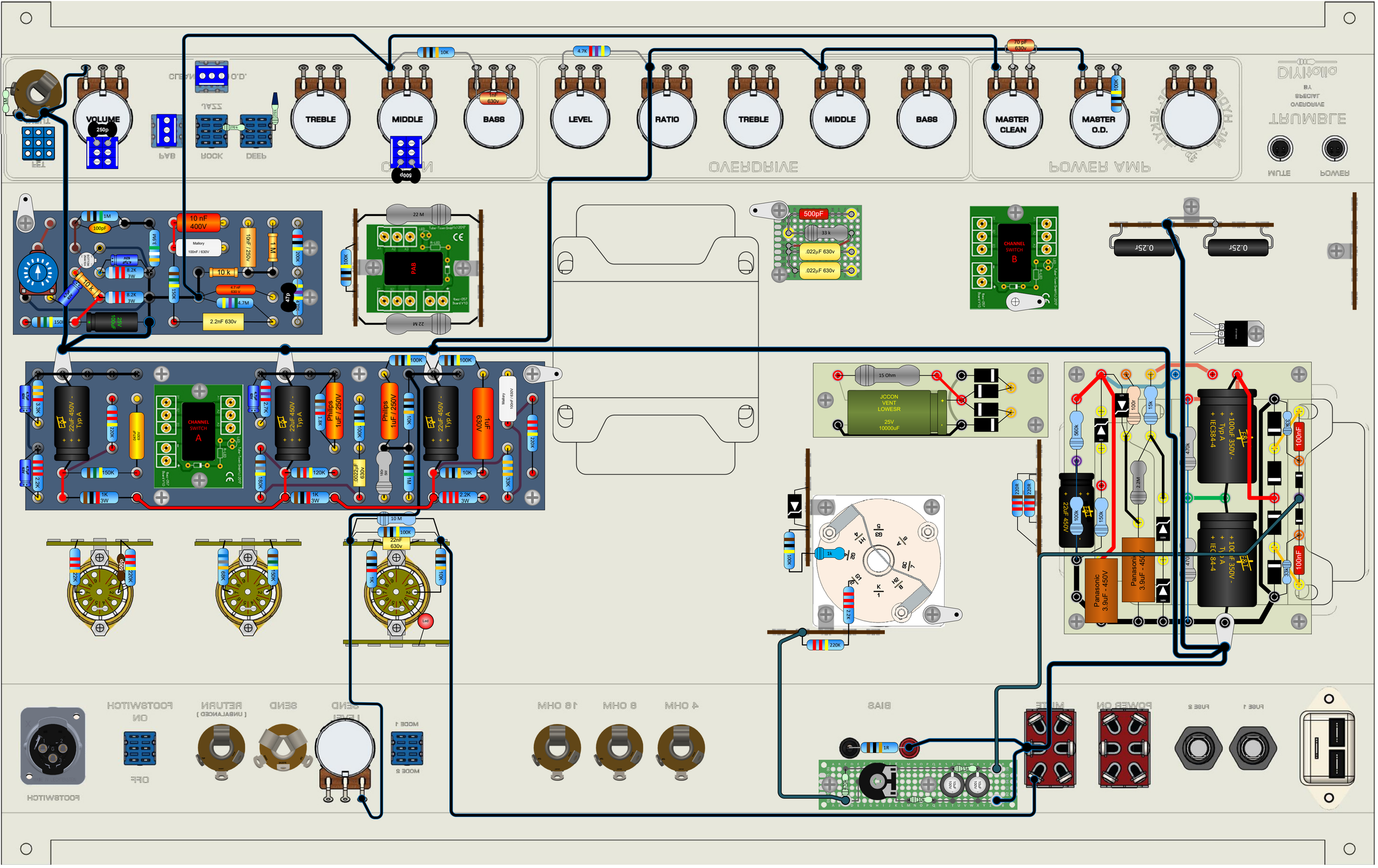
VOLUME
250p
TREBLE
MIDDLE
BASS
LEVEL
RATIO
TREBLE
MIDDLE
BASS
MASTER CLEAN
MASTER O.D.
10K
4.7K
70 pF 630v
1nF 630v
500p
100K
OVERDRIVE
POWER AMP
MUTE
POWER
CHANNEL SWITCH A
CHANNEL SWITCH B
Philips 1uF / 250V
22uF 450V - Typ A
1uF 630V
JCCON VENT LOWESR 25V 10000uF
15 Ohm
Panasonic 3.9uF - 450V
+ 100uF 350V - Typ A + IEC384-4
500pF
33 k
.022µF 630v
0.25r
10 nF 400V
Mallory 100nF / 630V
10uF /250V
1 M
10 k
4.7 nF 630 V
4.7M
2.2nF 630v
47p
22 M
PAB
10 M
22nF 630v
FOOTSWITCH
OFF
ON
RETURN
(UNBALANCED)
SEND
LEVEL
MODE 1
MODE 2
4 OHM
8 OHM
16 OHM
BIAS
FUSE 1
FUSE 2
POWER ON
MUTE