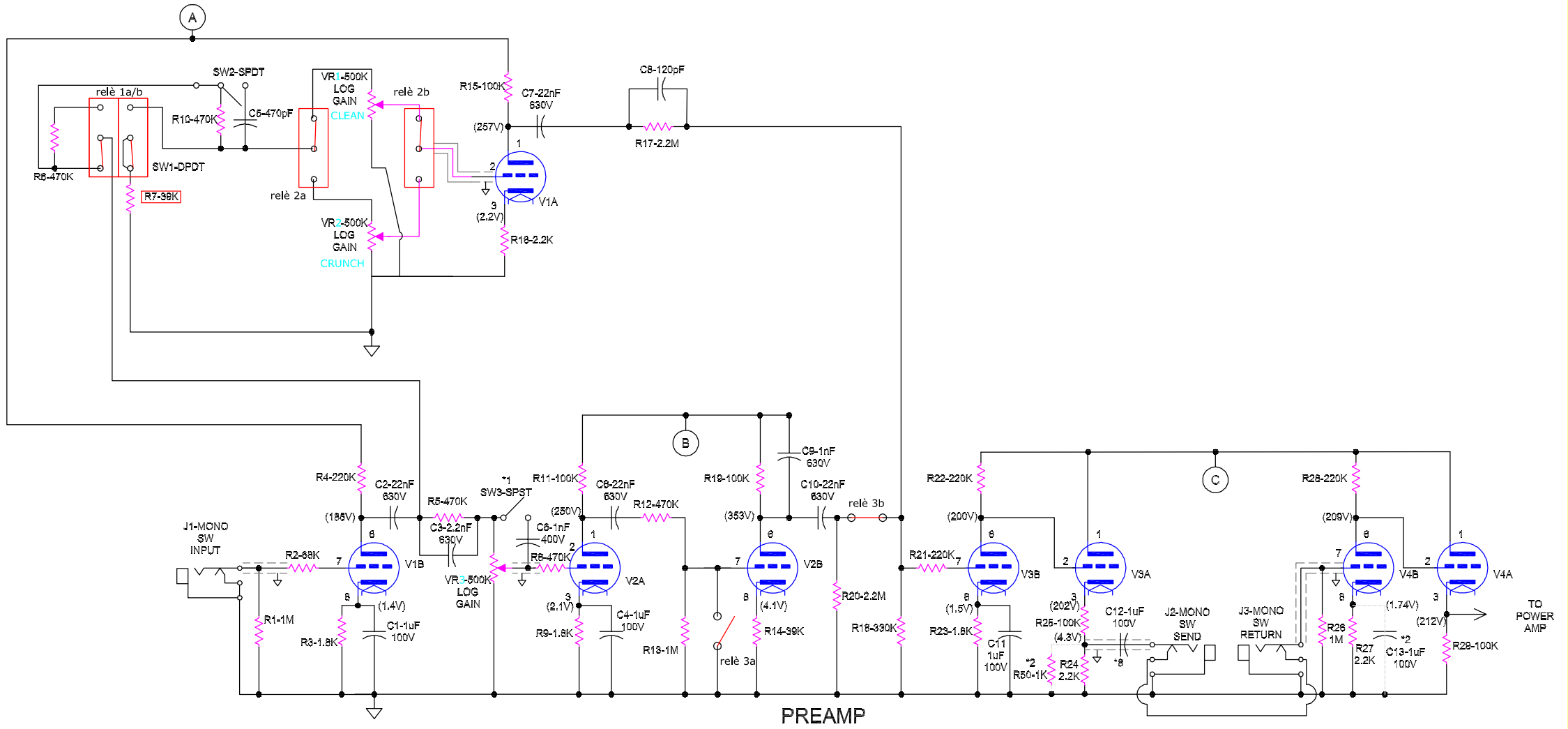
A
B
C
SW2-SPDT
relè 1a/b
R10-470K
C5-470pF
R8-470K
SW1-DPDT
R7-39K
VR1-500K
LOG
GAIN
CLEAN
relè 2b
relè 2a
VR2-500K
LOG
GAIN
CRUNCH
R15-100K
C7-22nF
630V
(257V)
C8-120pF
R17-2.2M
V1A
(2.2V)
R16-2.2K
R4-220K
C2-22nF
630V
(185V)
R5-470K
C3-2.2nF
630V
*1
SW3-SPST
J1-MONO
SW
INPUT
R2-68K
V1B
(1.4V)
R1-1M
R3-1.8K
C1-1uF
100V
VR3-500K
LOG
GAIN
C6-1nF
400V
R6-470K
R11-100K
C8-22nF
630V
(250V)
R12-470K
V2A
(2.1V)
R9-1.8K
C4-1uF
100V
R13-1M
relè 3a
R19-100K
C9-1nF
630V
C10-22nF
630V
relè 3b
(353V)
V2B
(4.1V)
R14-39K
R20-2.2M
R18-330K
R22-220K
(200V)
R21-220K
V3B
(1.5V)
R23-1.8K
C11
1uF
100V
*2
R50-1K
V3A
(202V)
R25-100K
(4.3V)
R24
2.2K
C12-1uF
100V
*8
J2-MONO
SW
SEND
J3-MONO
SW
RETURN
R28-220K
(209V)
V4B
(1.74V)
R26
1M
R27
2.2K
*2
C13-1uF
100V
V4A
(212V)
R29-100K
TO
POWER
AMP
PREAMP

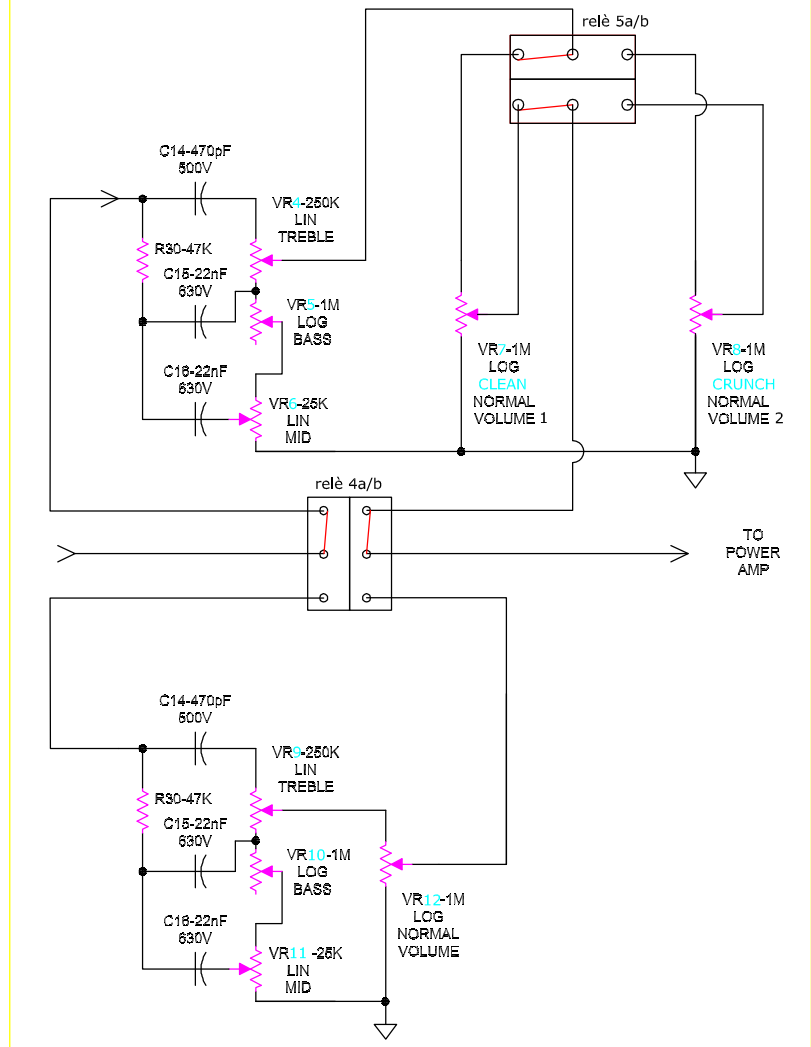
relè 5a/b
C14-470pF
500V
VR4-250K
LIN
TREBLE
R30-47K
C15-22nF
630V
VR5-1M
LOG
BASS
C16-22nF
630V
VR6-25K
LIN
MID
VR7-1M
LOG
CLEAN
NORMAL
VOLUME 1
VR8-1M
LOG
CRUNCH
NORMAL
VOLUME 2
relè 4a/b
TO
POWER
AMP
C14-470pF
500V
VR9-250K
LIN
TREBLE
R30-47K
C15-22nF
630V
VR10-1M
LOG
BASS
C16-22nF
630V
VR11 -25K
LIN
MID
VR12-1M
LOG
NORMAL
VOLUME