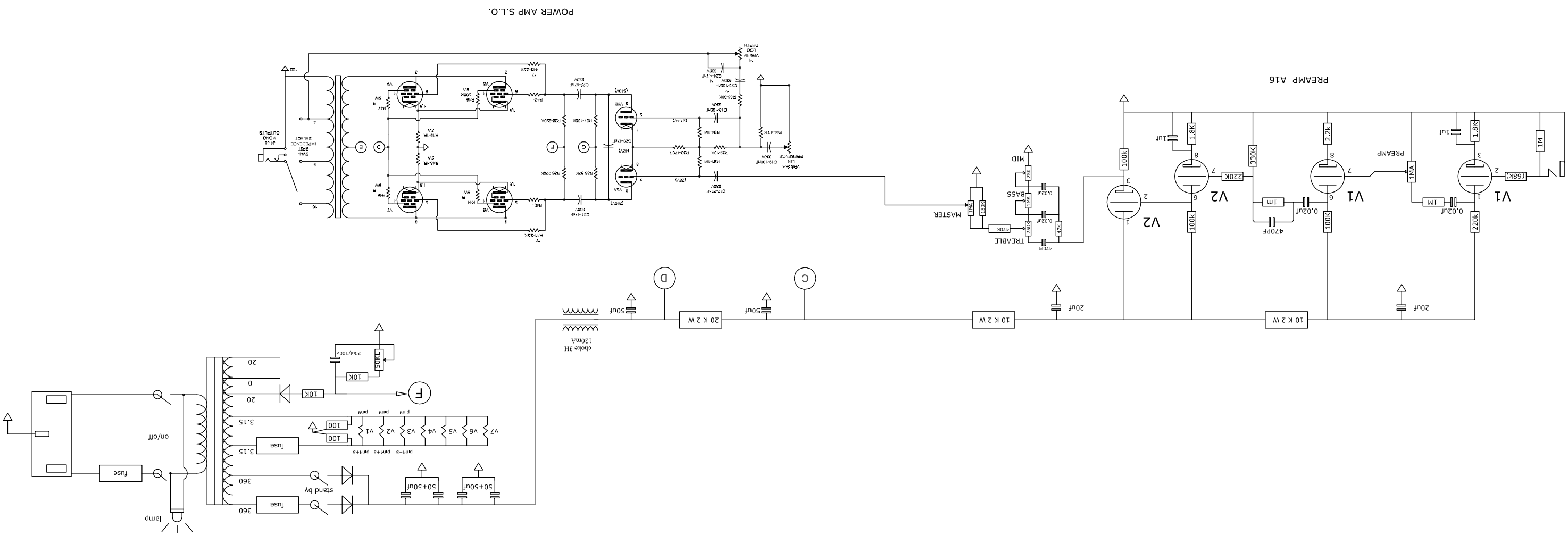
PREAMP A16
V1
V2
PREAMP
MASTER
TREABLE
BASS
MID
POWER AMP S.L.O.
choke 3H
120mA
10 K 2 W
20 K 2 W
20uf
50uf
470PF
0.02uf
1M
220k
100k
330K
220K
1.8K
2.2k
1uf
1MA
68K
470K
47K
50K
10K
5K
fuse
stand by
on/off
lamp
50+50uf
pin+5
pin9
3.15
360
20
0
V1
V2
V3
V4
V5
V6
V7
F
C
D