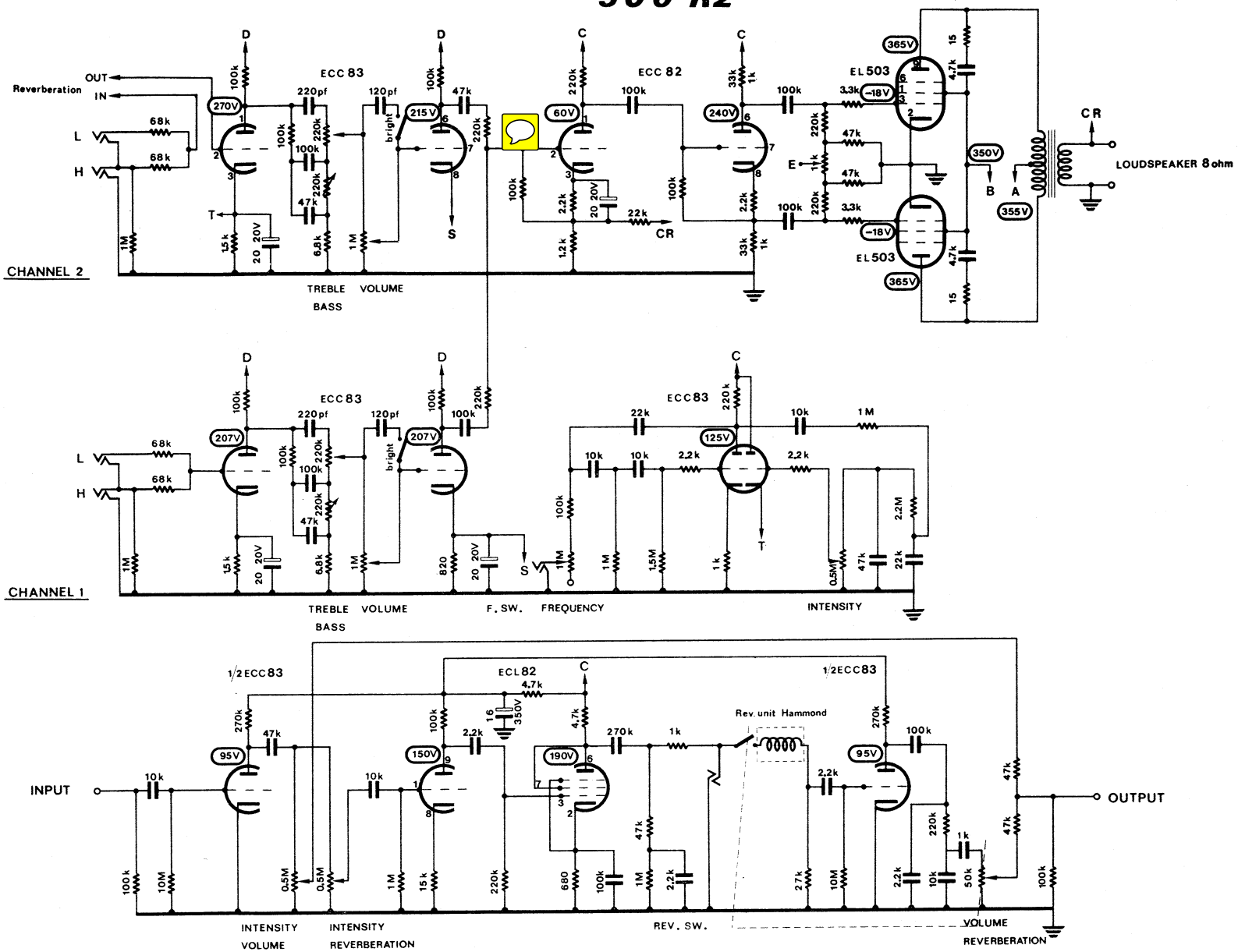

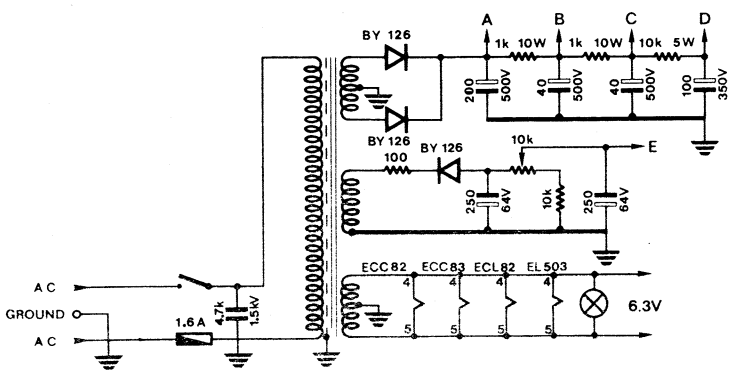

500 R2

FBT	des.		21 - 10 - 72

ALL RESISTORS ARE 1/2 W, OTHER ARE NOT SPECIFIED