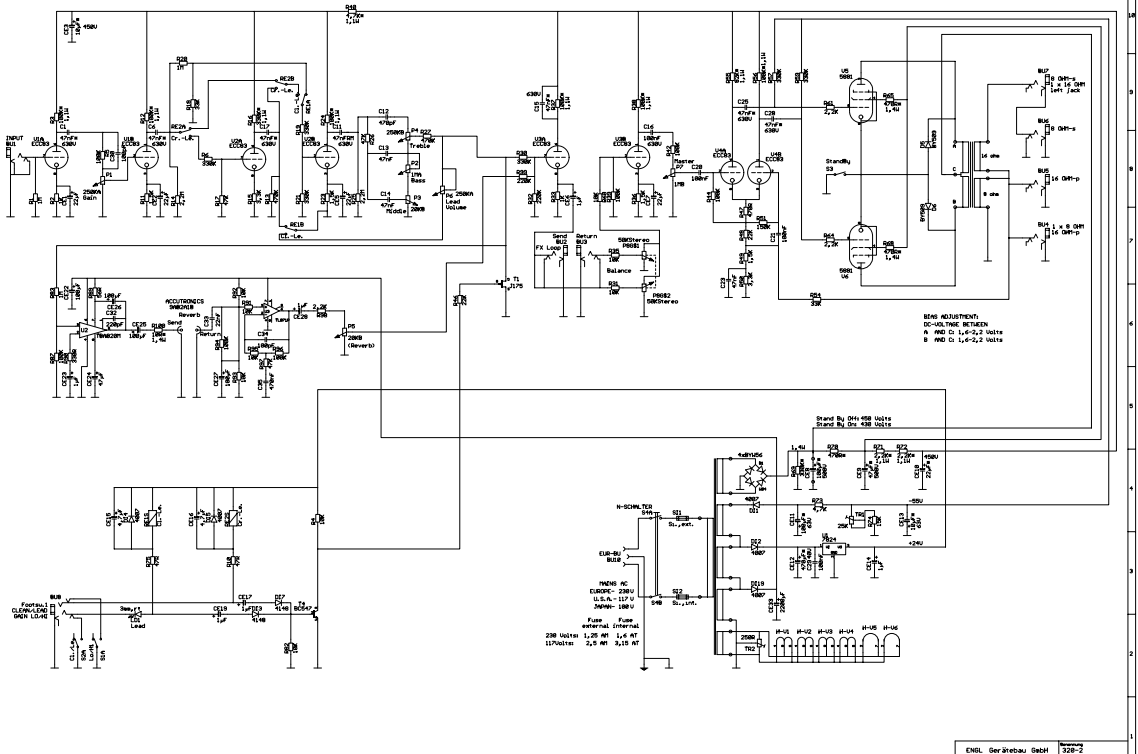
INPUT BU1
U1A ECC83
U1B ECC83
U2A ECC83
U2B ECC83
U3A ECC83
U3B ECC83
U4A ECC83
U4B ECC83
U5 6SB1
U6 6SB1
P1 250KA Gain
P2 1MA Bass
P3 20KB Middle
P4 250KA Treble
P6 250KA Lead Volume
P5 20KB (Reverb)
P8B1 50KStereo Balance
P8B2 50KStereo
Master P7 1MB
FX Loop Send BU2
Return BU3
T1 J175
ACCUTRONICS SM6DN18 Reverb
Send
Return
U10 TDA2020
Footsw.1 CLEAN/LEAD GAIN LO/HI
BU8
Sw.1 Lead
T4 BC547
Stand By DHi 450 Volts
Stand By Uno 430 Volts
4xBY206
N-SCHALTER S4A
S1 Sw.ext.
S2 Sw.int.
EUR-BU BU10
MAINS AC
EUROPE: 230V
U.S.A.: 117 V
JAPAN: 100 V
Fuse external
230 Volts 1,25 AT 1,6 AT
117Volts 2,5 AT 3,15 AT
TR2 250R
H-V1 H-V2 H-V3 H-V4 H-V5 H-V6
BIAS ADJUSTMENT:
DC-VOLTAGE BETWEEN
A AND C: 1,6-2,2 Volts
B AND C: 1,6-2,2 Volts
BU7 8 OHM-s 1 x 16 OHM left jack
BU6 8 OHM-s
BU5 16 OHM-p
BU4 1 x 8 OHM 16 OHM-p
16 ohm
8 ohm
ENGL Gerätebau GmbH
Benennung 320-2
Blatt 1/1