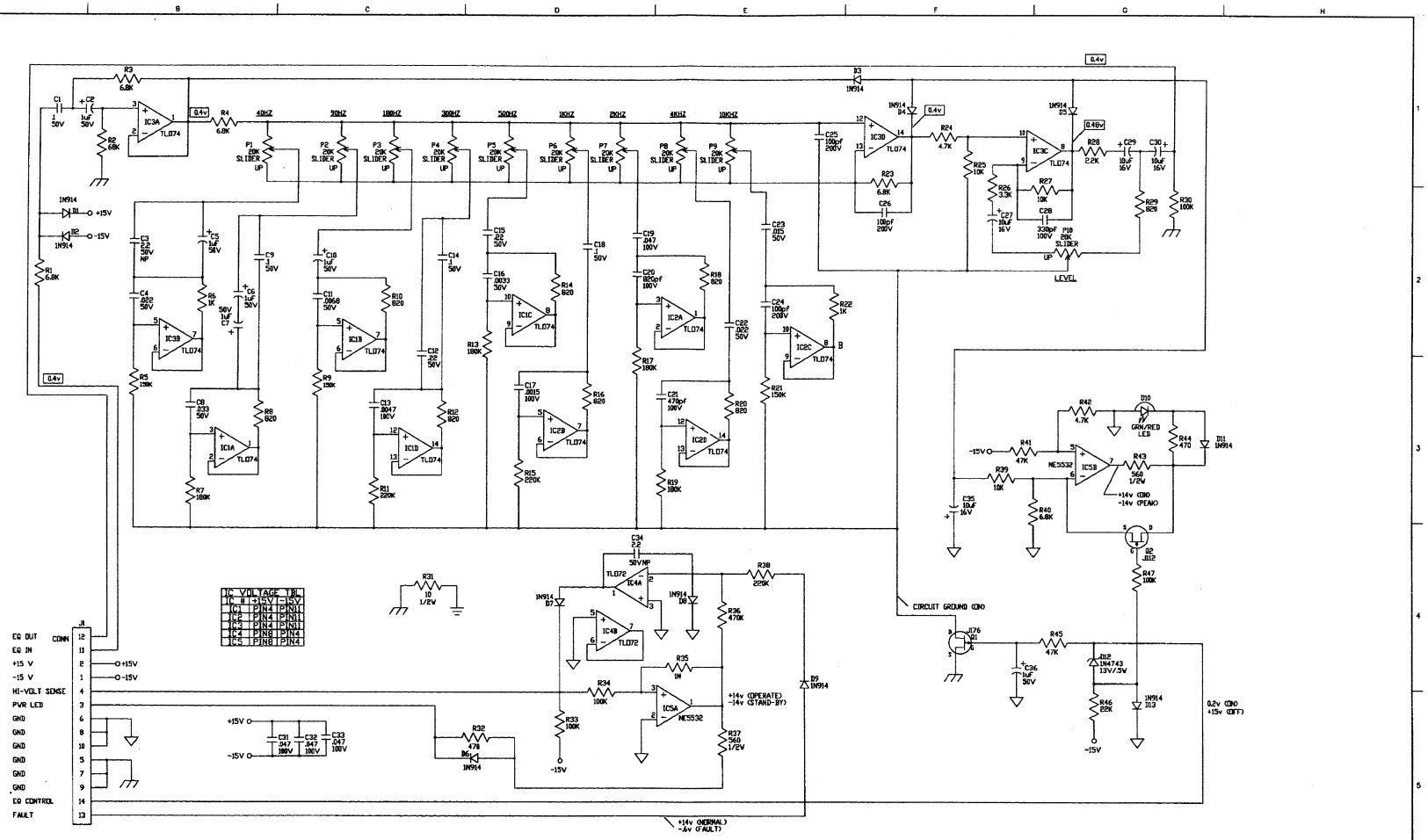

IC #	+15V	-15V
(C)	PIN4	PIN11
IC2	PIN4	PIN11
IC3	PIN4	PIN11
IC4	PIN8	PIN4
IC5	PIN8	PIN4

NOTES

1) CAUTION: SHOCK HAZARD!!
THIS UNIT CONTAINS HAZARDOUS VOLTAGE. DISCONNECT POWER AND BE SURE POWER SUPPLY IS DISCHARGED BEFORE TOUCHING INTERNAL PARTS.
2) UNLESS NOTED, RESISTOR VALUES IN OHMS, 1/4W-5% TOL. CAPACITOR VALUES IN MICROFARADS, 50V-10% TOL.
3) VOLTAGES ARE MEASURED WITH 1 MEGOHM OSCILLOSCOPE AND 10 MEGOHM DIGITAL VOLTMETER. EQ. ON, SLIDERS ARE IN CENTER POSITION.
4) VOLTAGES IN RECTANGLES ARE RMS SIGNAL VOLTAGES WITH 0.4v IN. OTHER VOLTAGES ARE D.C. IN CONDITIONS STATED.
5) CIRCUIT GROUND ⏚ DIRTY GROUND ⏚ CHASSIS GROUND ⏚

REV	DATE	BY	CHK'D	DESCRIPTION
3				
2	05/25/94	LMA		REV CHG TO REFLECT JUMPER CHG PER E150
1				

SIGNATURES:		DATE:
DRAWN:	ERW	3/11/93
CHK'D:		
APP'D:		
ORIGINAL ISSUED:		
PLOT DATE:		05/25/94
PLOT TIME:		13:46:19
FILE NAME:		72802H22

1200 DORMAN DR.
ST. LOUIS, MISSOURI
63146

PROJECT NAME: SVT-2 PRO

DRAWING NAME: GRAPHIC EQ. SCHEMATIC

DRAWING NO. 07S728-02 REV. 2

SCALE: 1:1 SHEET: 1 OF 1