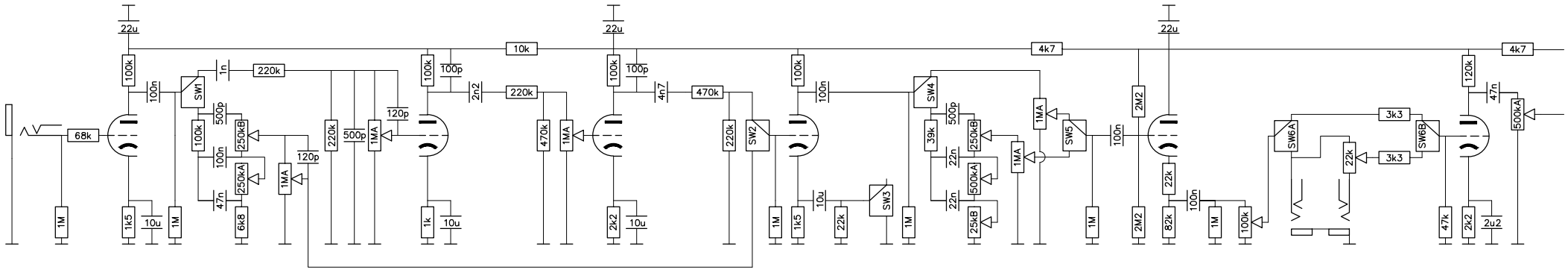
68k
1M
22u
100k
100n
1k5
10u
1M
SW1
1n
220k
500p
250kB
100k
100n
250kA
47n
6kB
120p
1MA
220k
500p
1MA
120p
100k
100p
2n2
220k
1k
10u
470k
1MA
22u
100k
100p
4n7
470k
2k2
10u
220k
SW2
10k
100k
100n
1M
1k5
10u
22k
SW3
1M
SW4
39k
500p
22n
250kB
22n
500kA
22n
25kB
1MA
1MA
SW5
1M
4k7
22u
2M2
100n
2M2
22k
82k
100n
1M
100k
SW6A
22k
3k3
3k3
SW6B
47k
2k2
2u2
120k
47n
500kA
4k7