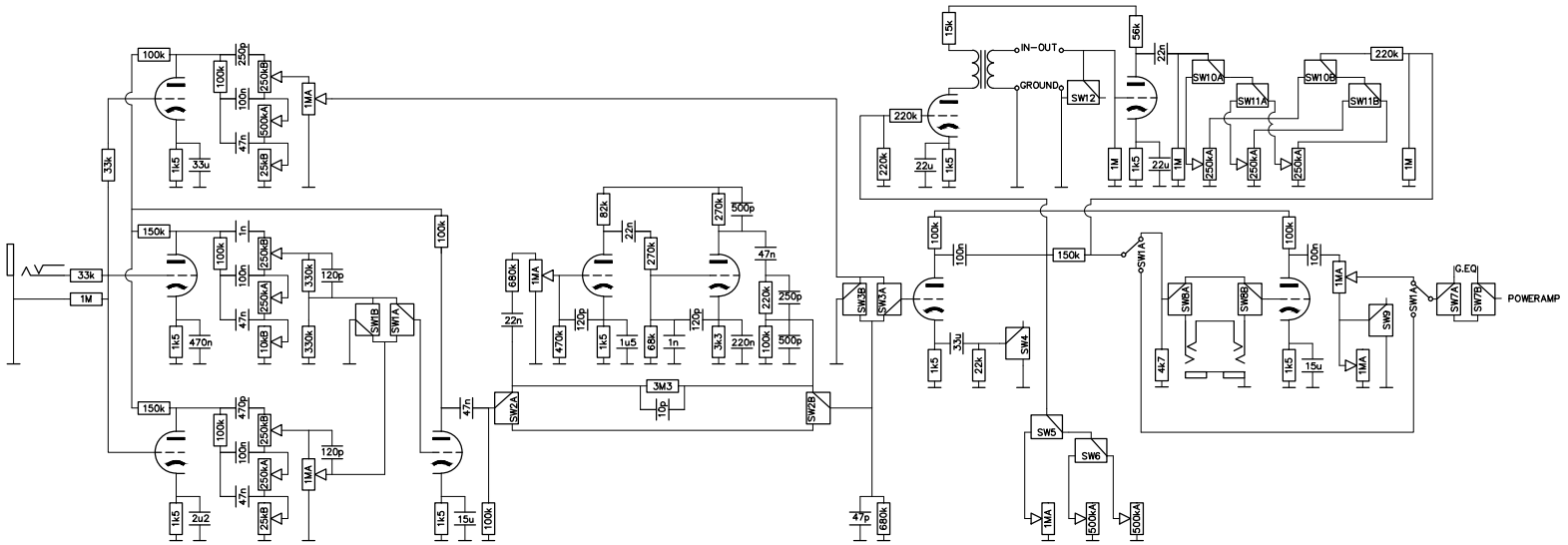
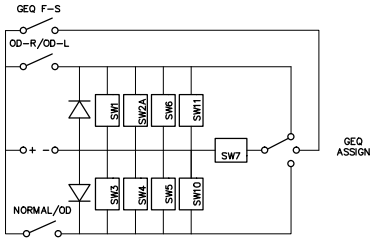
NOTE:
switch NORMAL/OD acceso in NORMAL
switch OD-RHYTHM/OD-LEAD acceso in OD-LEAD
eq presettabile in OD-LEAD/FOOT/NORMAL