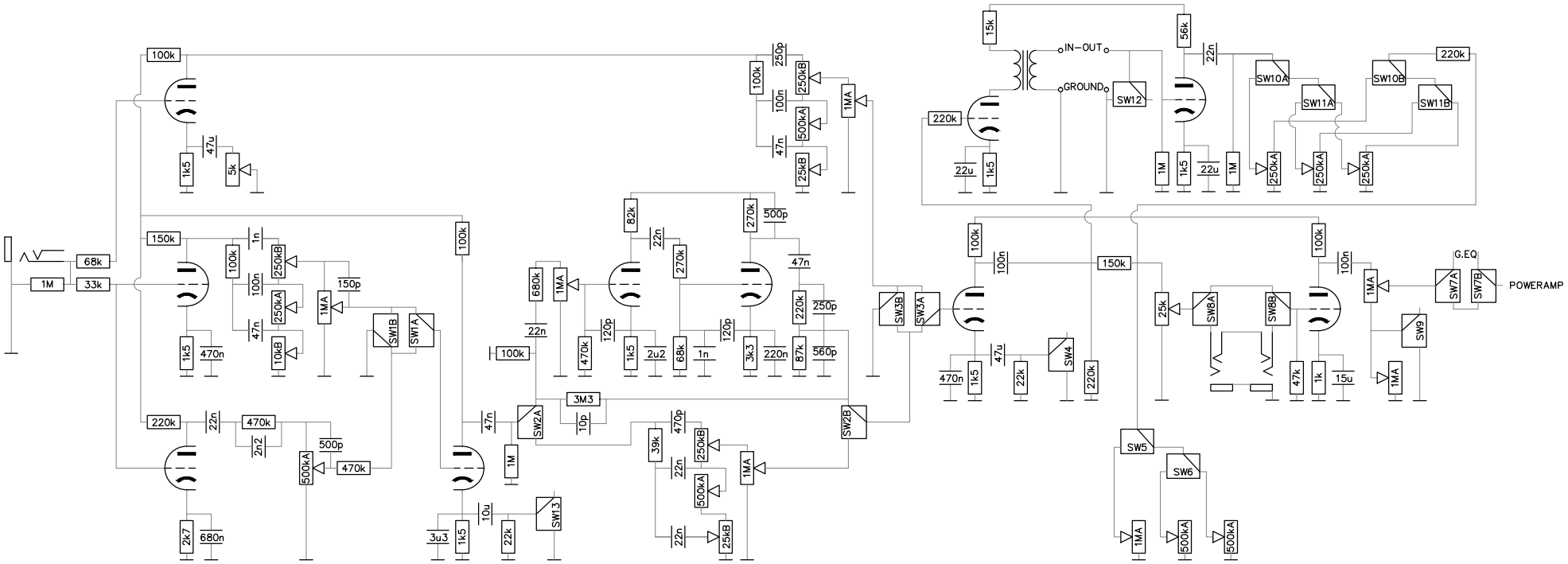
1M
68k
33k
100k
1k5
47u
5k
150k
100k
1n
100n
250kB
250kA
47n
10kB
1MA
150p
SW1B
SW1A
470n
220k
22n
470k
2n2
500p
500kA
470k
2k7
680n
100k
47n
1M
3u3
1k5
10u
22k
SW13
100k
250p
250kB
100n
500kA
47n
25kB
1MA
82k
22n
680k
1MA
470k
120p
1k5
2u2
270k
500p
270k
68k
1n
120p
47n
3k3
220n
220k
250p
87k
560p
SW3B
SW3A
3M3
10p
SW2A
SW2B
470p
39k
250kB
22n
500kA
1MA
22n
25kB
15k
IN-OUT
GROUND
SW12
220k
22u
1k5
56k
22n
SW10A
SW10B
220k
SW11A
SW11B
1M
1k5
22u
1M
250kA
250kA
250kA
100k
100n
150k
470n
1k5
47u
22k
SW4
220k
25k
SW8A
SW8B
100k
100n
47k
1k
15u
1MA
1MA
SW9
G.EQ
SW7A
SW7B
POWERAMP
SW5
SW6
1MA
500kA
500kA