HEAVYwatter v3.5.1
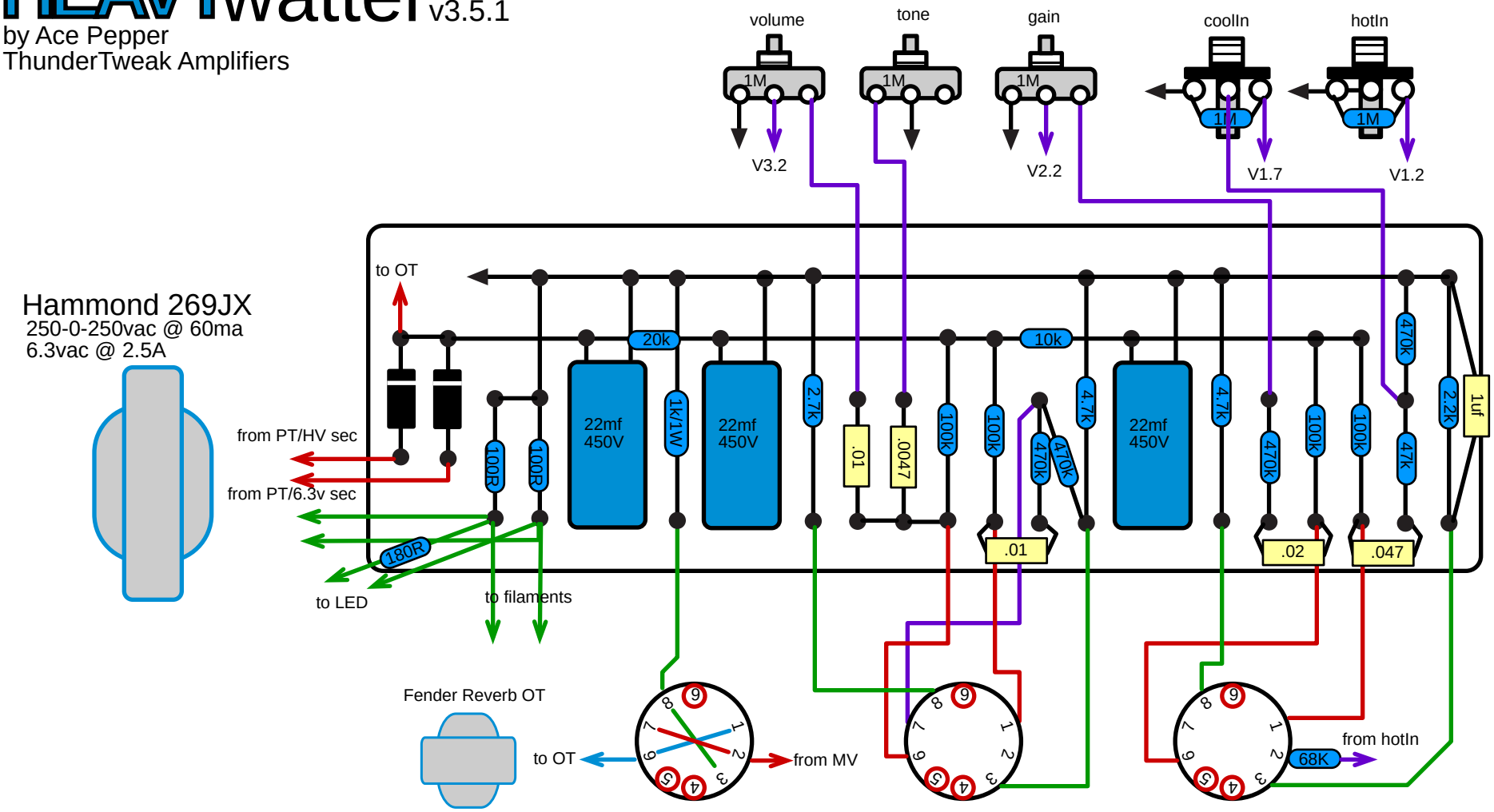
by Ace Pepper
ThunderTweak Amplifiers