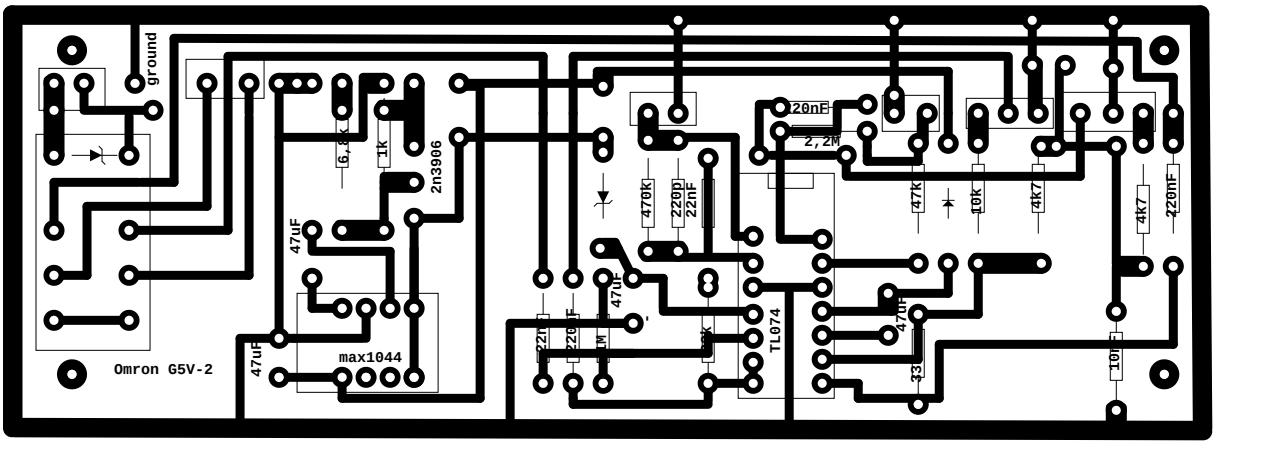
CONTROLLO RELAY
OUT IN
IN TANK
OUT TANK
DWELL POT 50KB
MIX POT 50KB
ground
Omron G5V-2
6,8k
1k
2n3906
47uF
47uF
max1044
22n
220nF
1M
470k
220p
22nF
47uF
TL074
20nF
2,2M
47k
10k
4k7
4k7
220nF
47uF
33
10nF